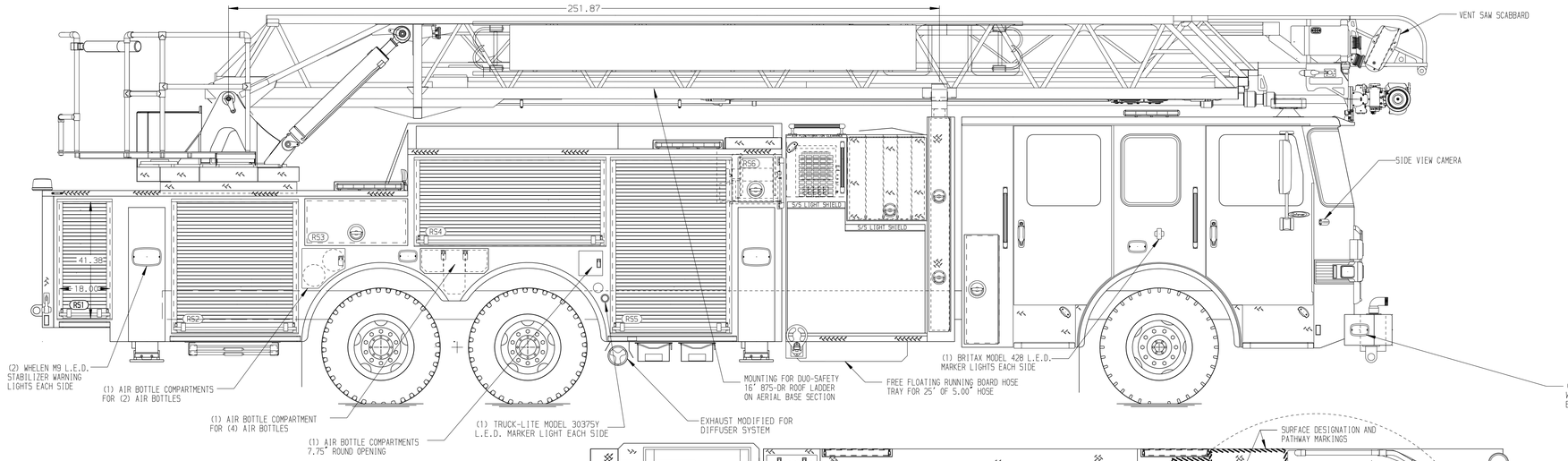

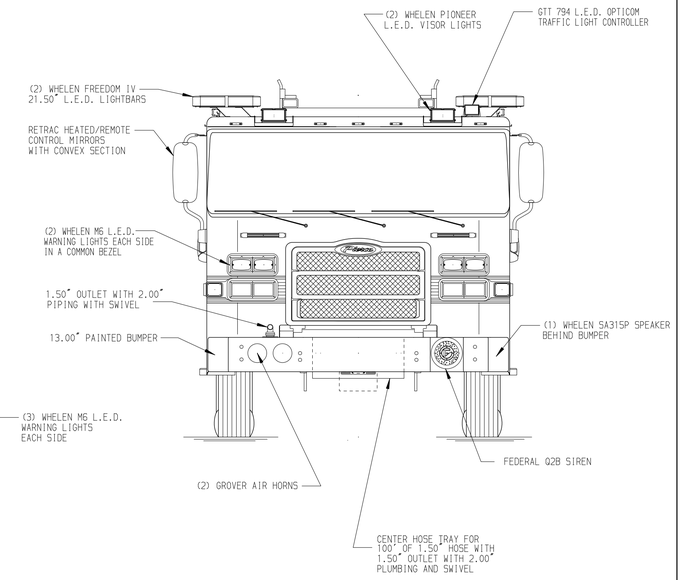

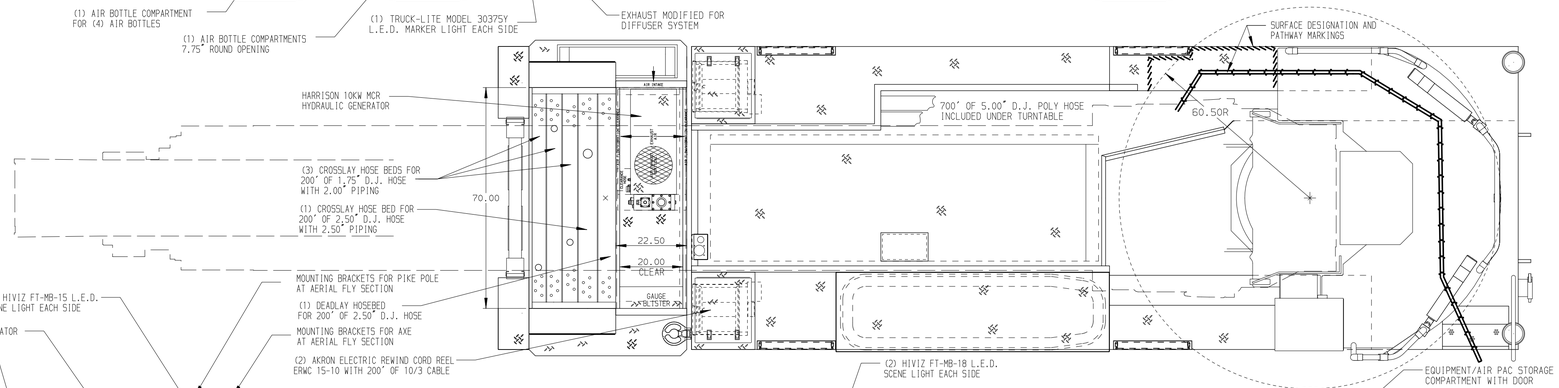

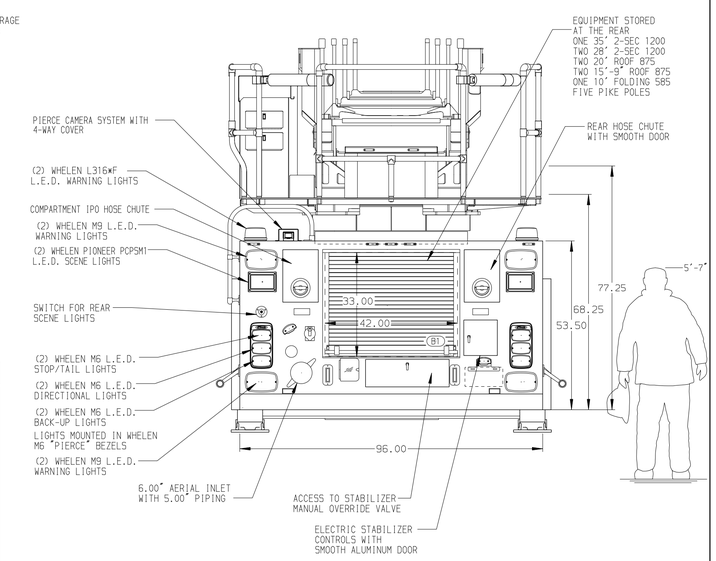

ALUMINUM BODY

SIDE ROLL AND FRONTAL IMPACT PROTECTION

NOTE

DIMENSIONS SHOWN ARE APPROXIMATE AND ARE SUBJECT TO MINOR DEVIATIONS AS MAY OCCUR OR BE NECESSARY IN CONSTRUCTION.
MINOR DETAILS NOT SHOWN.

1. ONSPOT AUTOMATIC TIRE CHAINS TO BE PROVIDED AT REAR
2. ANCHOR PLATE FOR NEIDERMAN EXHAUST SYSTEM HOSE LOCATION PER SHOP ORDER
3. BATTERY CHARGER LOCATED BEHIND DRIVER SEAT
4. BATTERY CHARGE INDICATOR LOCATED ON DRIVER'S SEAT RISER
5. STABILIZER COMPARTMENTS MODIFIED FOR 18" GROUND PENETRATION
6. SEVEN S/STL DRIP PAN/GUARD FOR ROLL-UP DOOR LOCATED PER SHOP ORDER
7. SIX ADJUSTABLE FULL WIDTH/FULL DEPTH SHELF IN COMPARTMENTS PER SHOP ORDER
8. TWO FLOOR MOUNTED SLIDE-OUT TRAY IN COMPARTMENTS PER SHOP ORDER
9. CIRCUIT BREAKER PANEL IN COMPARTMENT L54
10. TWO 120V RECEPTACLE LOCATED PER SHOP ORDER
11. L.E.D. LIGHTING ON AERIAL LADDER SECTIONS
12. 120V POWER TO AERIAL TIP
13. 2-WAY INTERCOM SYSTEM BETWEEN AERIAL TIP AND TURNTABLE
14. AERIAL PEDESTAL RAISED 3.00"
15. LIFTING EYE ROPE RESCUE ATTACHMENT AT AERIAL TIP
16. 1500 GPM HIGH FLOW WATERWAY
17. AIR OUTLET WITH SHUTOFF VALVE ON DS PUMP PANEL
18. LIMITED RETRACTION 14.00"
19. AIR INLET LOCATED PER SHOP ORDER
20. THREE SLIDE-OUT TOOLBOARDS LOCATED IN COMPARTMENT PER SHOP ORDER
21. ONE FIXED MOUNTED SHELF LOCATED PER SHOP ORDER
22. VENT IN COMPARTMENTS PER SHOP ORDER

REV	DATE	BY	CH
3	21MAR19	LWE	MSA
2	27FEB19	LWE	MSA
1	29NOV18	LWE	CRI

CHASSIS DATA
MAKE: PIERCE
MODEL: ENFORCER

Pierce MANUFACTURING INC.

TITLE: 107' ASCENDANT AERIAL LADDER AND BODY ASSEMBLY
500 GALLON WATER TANK

FOR: ROANOKE FIRE-EMS
ROANOKE, VA

DWG NO.: 32479AD

JOB NO.	32479
SCALE	1:24
DATE	
DRAWN BY	LWE 09NOV18
CHECKED BY	GRM 16NOV18
SHEET SIZE	D
SHEET NO.	1 OF 1

View File Created 27-MAR-2019 13:33:22