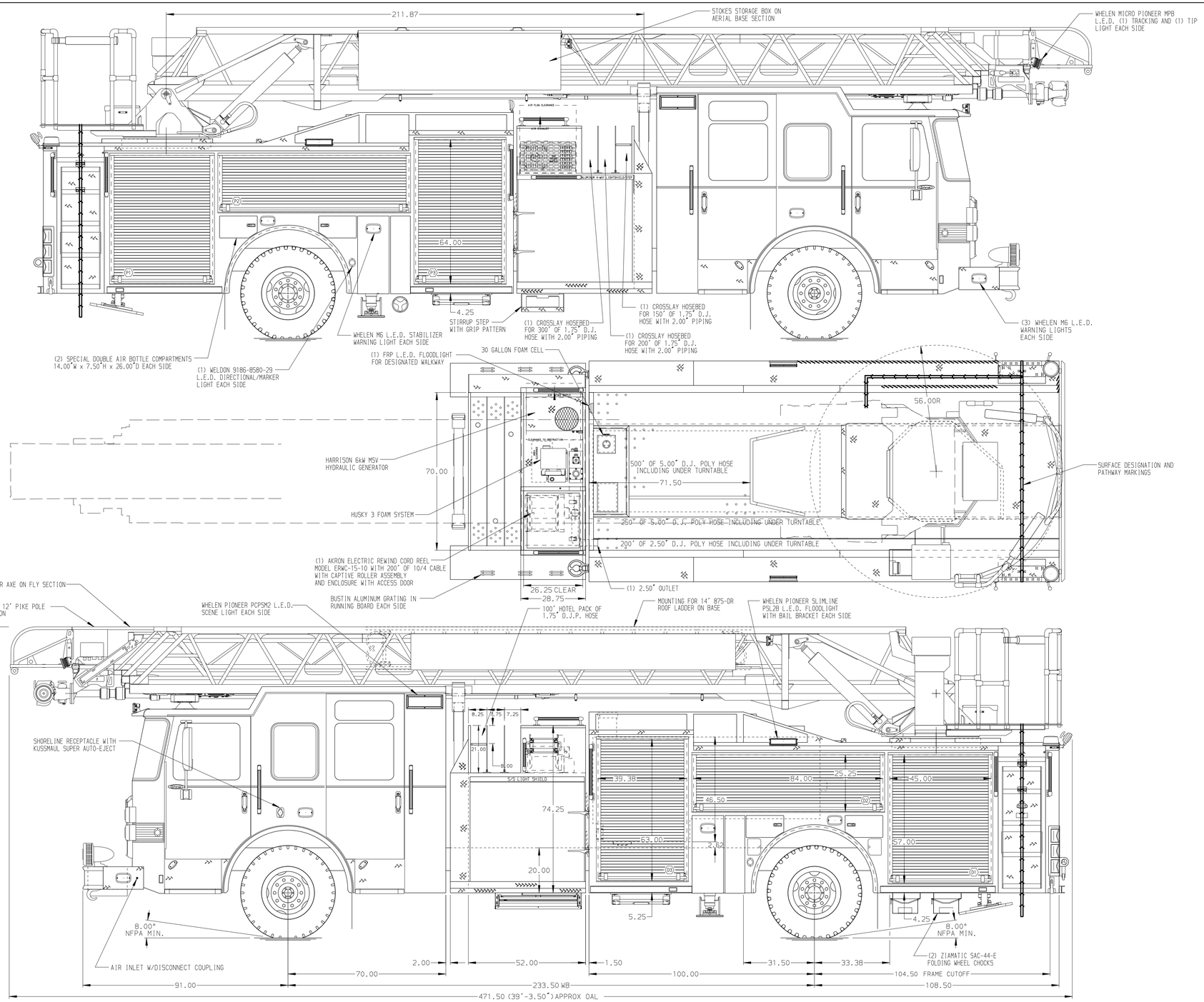

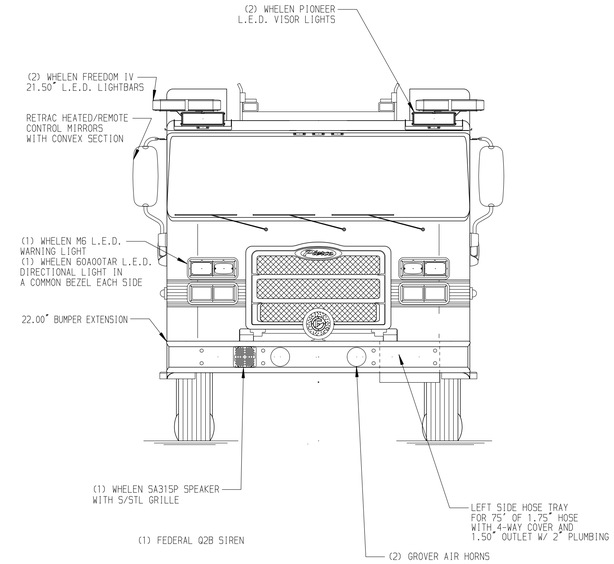

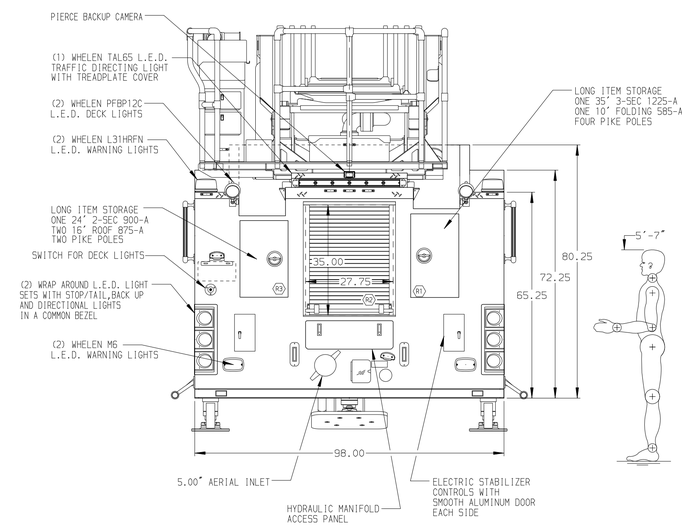

ALUMINUM BODY

SIDE ROLL AND FRONTAL IMPACT PROTECTION

NOTE

DIMENSIONS SHOWN ARE APPROXIMATE AND ARE SUBJECT TO MINOR DEVIATIONS AS MAY OCCUR OR BE NECESSARY IN CONSTRUCTION.
MINOR DETAILS NOT SHOWN.

1. NO LIMITED RETRACTION
2. L.E.D. LIGHTING ON AERIAL LADDER SECTIONS
3. CIRCUIT BREAKER LOCATED IN COMPARTMENT D3
4. BATTERY CHARGER LOCATED IN COMPARTMENT D3
5. BATTERY CHARGE INDICATOR LOCATED ON THE DRIVER SIDE SEAT RISER
6. ADJUSTABLE SHELVES IN COMPARTMENTS D1,D2,P1,R2-TWO IN D3 & P3
7. ONE FLOOR MOUNTED SLIDE-OUT TRAY IN COMPARTMENTS D1,P1,D3 & P3
8. NON-RAISED AERIAL PEDESTAL
9. 1500 GPM HIGH FLOW WATERWAY
10. 2-WAY INTERCOM SYSTEM BETWEEN AERIAL TIP AND TURNTABLE
11. LIFTING EYE ROPE RESCUE ATTACHMENT AT AERIAL TIP
12. TRIDENT FOLDING STEPS ON AERIAL DEVICE
13. 120V DUPLEX RECEPTACLE AT THE AERIAL TIP

REV	DATE	BY	CH
E	03JAN19	SVA	-
D	05SEP18	SVA	EFA
C	10AUG18	SVA	EFA
B	01AUG18	SVA	EFA
A	05APR18	SVA	GRM

CHASSIS DATA
MAKE: PIERCE
MODEL: ENFORCER

Pierce MANUFACTURING INC.

TITLE: 107' ASCENDANT AERIAL LADDER AND BODY ASSEMBLY
530 GALLON WATERTANK-500 WATER/30 FOAM

FOR: VILLAGE OF ELK GROVE FIRE DEPARTMENT
ELK GROVE, IL

DWG NO.: 32487AD

JOB NO.	32487
SCALE	1:24
DATE	
DRAWN BY	SVA 20MAR18
CHECKED BY	CRI 28MAR18
SHEET SIZE	D
SHEET NO.	1 OF 1

View File Created 23-JAN-2019 07:56:20