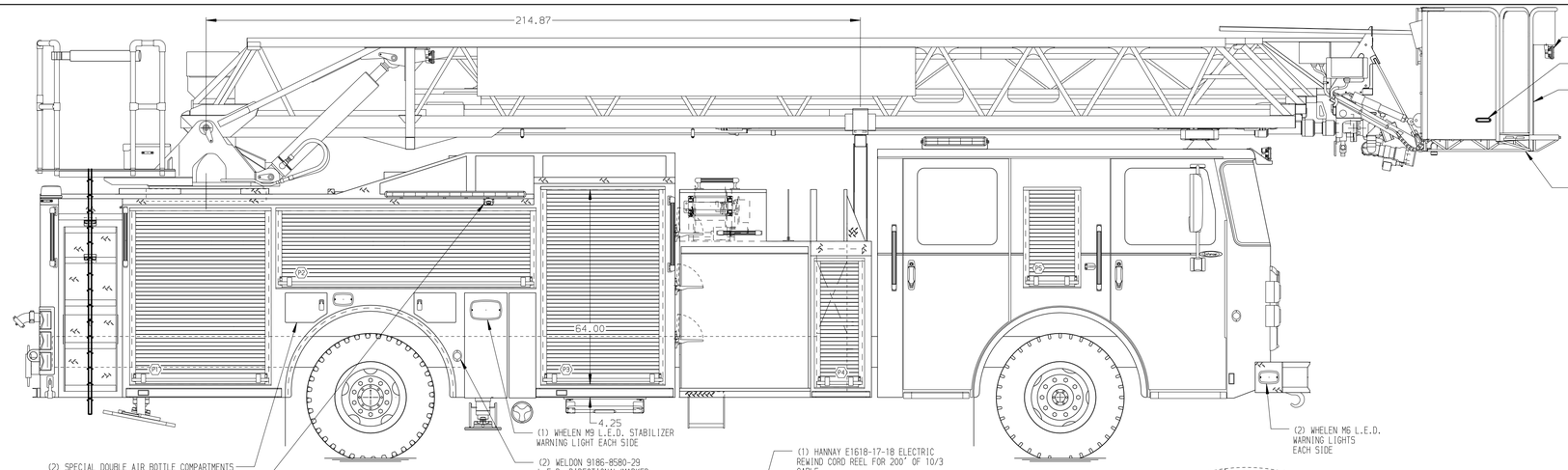

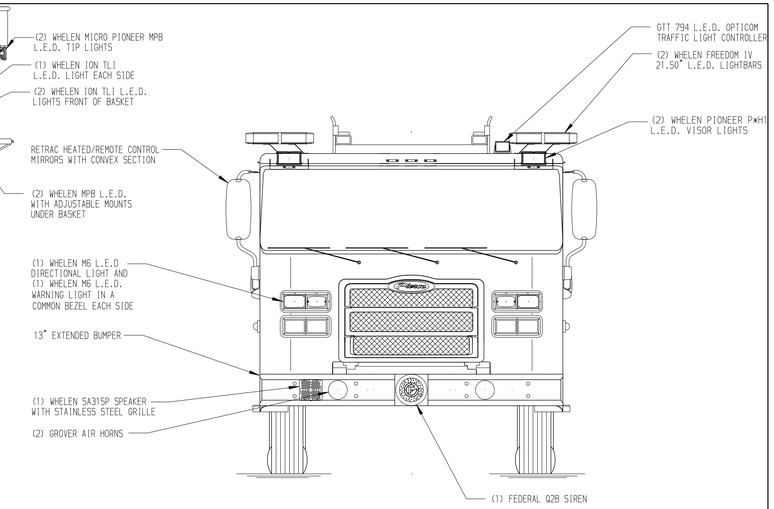

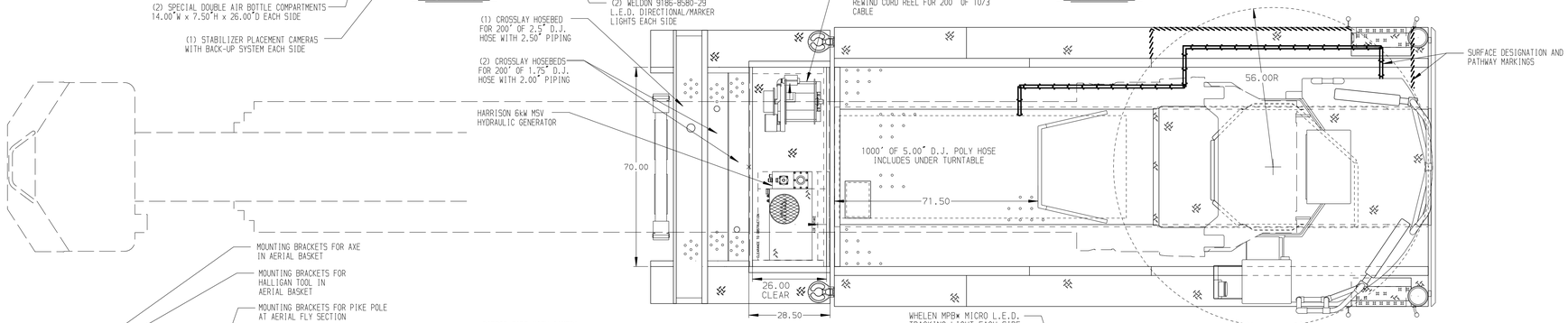

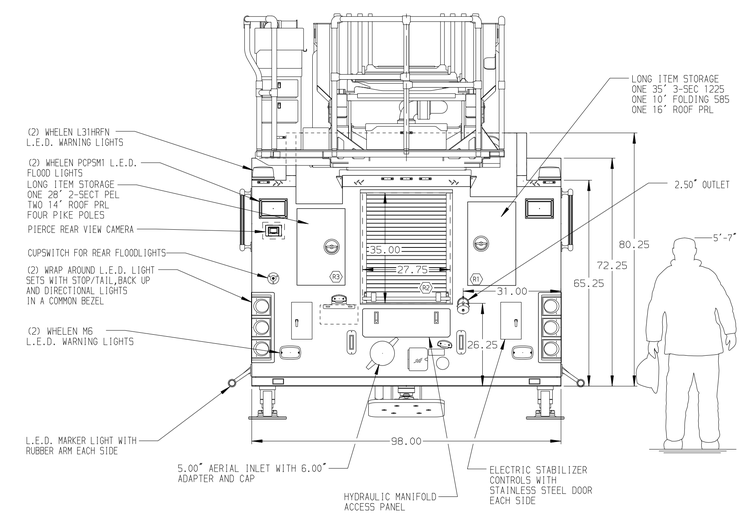

ALUMINUM BODY

NOTE

DIMENSIONS SHOWN ARE APPROXIMATE AND ARE SUBJECT TO MINOR DEVIATIONS AS MAY OCCUR OR BE NECESSARY IN CONSTRUCTION.
MINOR DETAILS NOT SHOWN.

1. ONSPOT AUTOMATIC TIRE CHAINS TO BE PROVIDED AT REAR
2. ROSCO WINDSHIELD MOUNTED CAMERA SYSTEM WITH DVR
3. BATTERY CHARGER/COMPRESSOR LOCATED BEHIND DRIVER'S SEAT
4. AIR INLET WITH DISCONNECT COUPLING AT DRIVER'S SIDE PUMP PANEL
5. BATTERY CHARGE INDICATOR LOCATED ON DRIVER'S SEAT RISER
6. ONE ADJUSTABLE FULL WIDTH/FULL DEPTH SHELF IN COMPARTMENT TBD
7. ONE FLOOR MOUNTED SLIDE-OUT TRAY IN COMPARTMENT D1,D3,P1,P3
8. ONE SWING-OUT ALUMINUM TOOL BOARD IN COMPARTMENT P2
9. ONE 'L' SHAPED PARTITION IN COMPARTMENT P2
10. CIRCUIT BREAKER PANEL IN COMPARTMENT D3
11. FOLDING STEPS ON AERIAL DEVICE
12. L.E.D. LIGHTING ON AERIAL LADDER SECTIONS
13. 2-WAY INTERCOM SYSTEM BETWEEN AERIAL TIP AND TURNTABLE
14. 1250 GPM HIGH FLOW WATERWAY
15. LADDER BELT STORAGE AT TURNTABLE FOR 6 BELTS

REV	DATE	BY	CH
1	18APR18	MWA	GRM

CHASSIS DATA
MAKE: PIERCE
MODEL: ENFORCER

CUSTOMER APPROVAL
APPROVED BY: _____
DATE: _____

Pierce MANUFACTURING INC.

TITLE: 110' ASCENDANT AERIAL LADDER AND BODY ASSEMBLY 500 GALLON WATERTANK
FOR: FRANKLIN COUNTY PUBLIC SAFETY ROCKY MOUNT, VIRGINIA
DWG NO.: 32500AD

JOB NO.	32500
SCALE	1:24
DATE	
DRAWN BY	MWA 04APR18
CHECKED BY	CRI 12APR18
SHEET SIZE	D
SHEET NO.	1 OF 1

View File Created 18-APR-2018 12:54:20