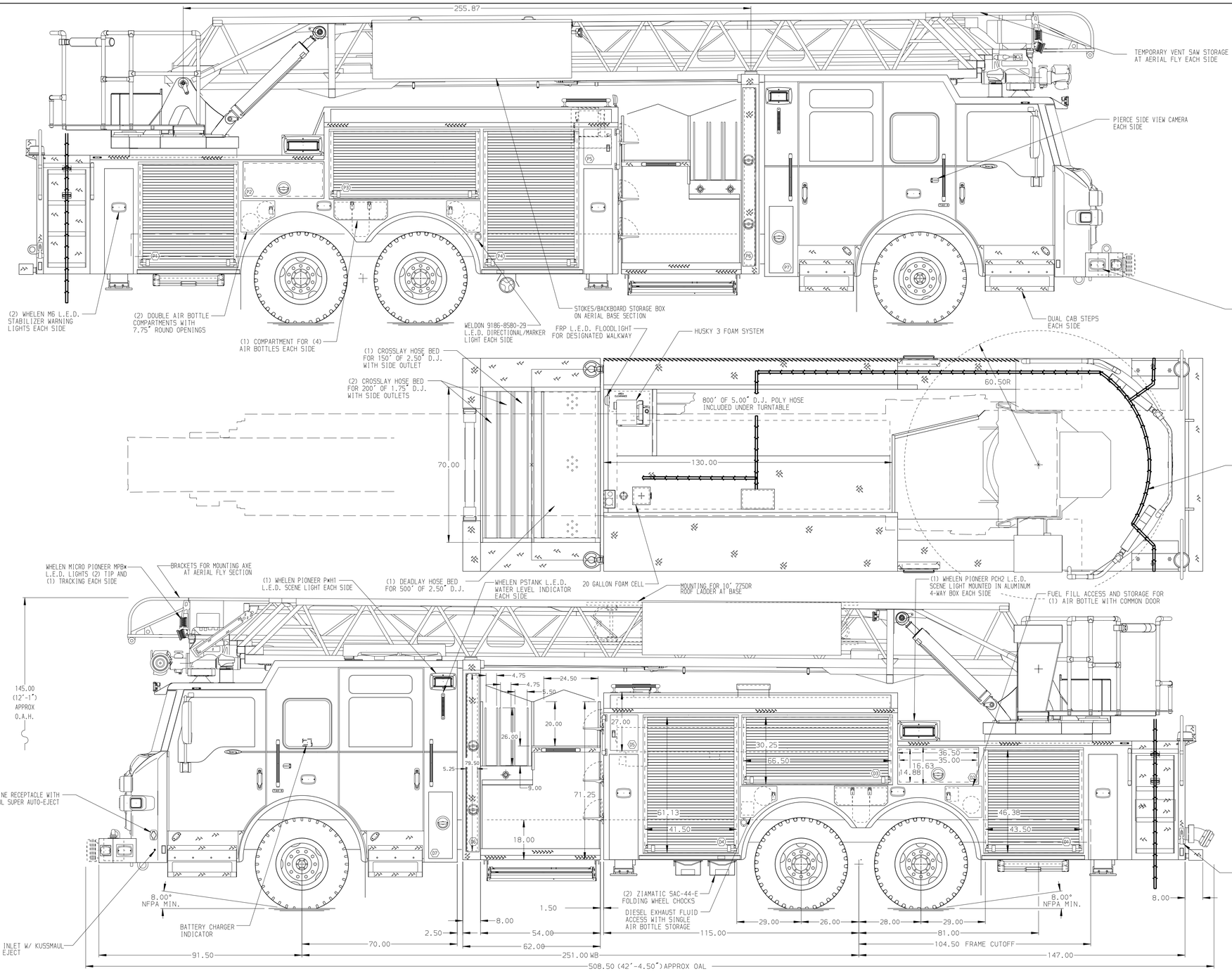

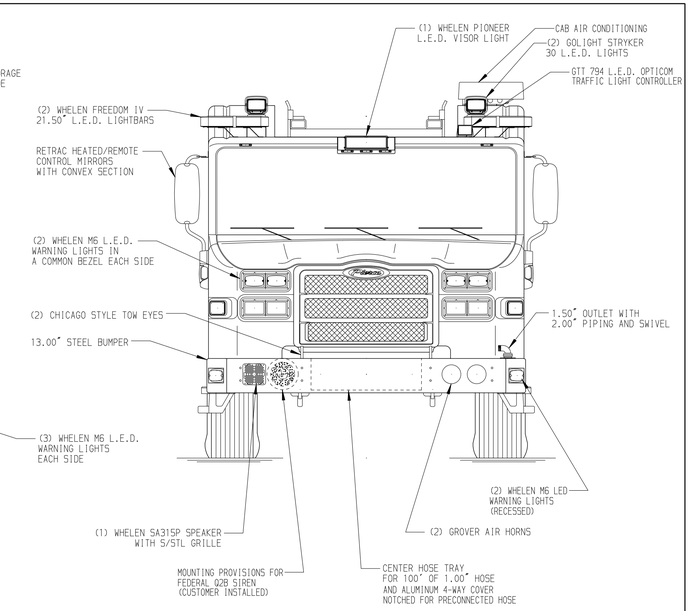

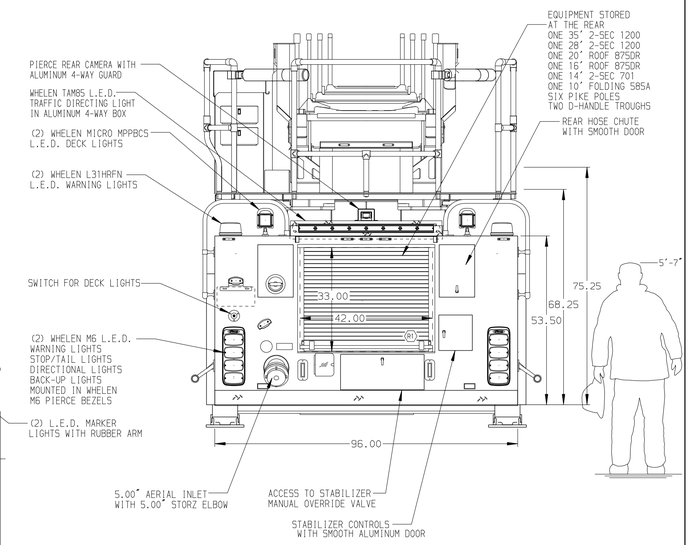

ALUMINUM BODY

SIDE ROLL AND FRONTAL IMPACT PROTECTION

NOTE

DIMENSIONS SHOWN ARE APPROXIMATE AND ARE SUBJECT TO MINOR DEVIATIONS AS MAY OCCUR OR BE NECESSARY IN CONSTRUCTION.
MINOR DETAILS NOT SHOWN.

1. 2-WAY INTERCOM SYSTEM BETWEEN AERIAL TIP AND TURNTABLE
2. ONE SET OF STABILIZER PLACEMENT LASERS
3. AIR OUTLET WITH SHUT-OFF VALVE LOCATED ON DRIVER'S SIDE PUMP PANEL
4. BATTERY CHARGER MOUNTED BEHIND DRIVER'S SIDE SEAT
5. TWO ADJUSTABLE SHELVES IN COMPARTMENTS D1,P1, D4 & P4
6. ONE FLOOR MOUNTED SLIDE-OUT TRAY IN COMPARTMENTS D1,D4,P1 & P4
7. 3.00" RAISED AERIAL PEDESTAL
8. 1500 GPM HIGH FLOW WATERWAY
9. ONE ADJUSTABLE VERTICAL PARTITION IN COMPARTMENT D4
10. HORIZONTAL EQUIPMENT MOUNTING TRACKS IN COMPARTMENTS D3 & P3
11. REMOTE LADDER CONTROLS AT AERIAL TIP
12. ALUMINUM SWING-OUT TOOLBOARD WITH PAC TRAC IN COMPARTMENT D3
13. 15/20A 120V 3-PR, 3WR 5B DUP. GFI RECEPTACLE (6' OF EXTRA WIRE AND UNMOUNTED) LOCATED IN COMPARTMENTS P1 & P4
14. SLIDE-OUT TOOL BOARD WITH PEGBOARD PATTERN IN COMPARTMENT D4
15. AERIAL PEDESTAL RAISED 3.00"
16. LIFTING EYE ROPE RESCUE ATTACHMENT AT AERIAL TIP
17. L.E.D. LIGHTING ON AERIAL LADDER SECTIONS
18. NO LIMITED RETRACTION

REV	DATE	BY	CH
▽	-	-	-
▽	09APR18	SVA	GRM

CHASSIS DATA
MAKE: PIERCE
MODEL: VELOCITY

Pierce MANUFACTURING INC.

TITLE: 107' ASCENDANT AERIAL LADDER AND BODY ASSEMBLY
320 GALLON TANK, 300 WATER/20 FOAM

FOR: CITY OF BURLINGTON
BURLINGTON, WA

DWG NO.: 32502AD

JOB NO.	32502
SCALE	1:24
DATE	
DRAWN BY	SVA 28MAR18
CHECKED BY	CRI 02APR18
SHEET SIZE	D
SHEET NO.	1 OF 1

View File Created 09-APR-2018 12:52:54