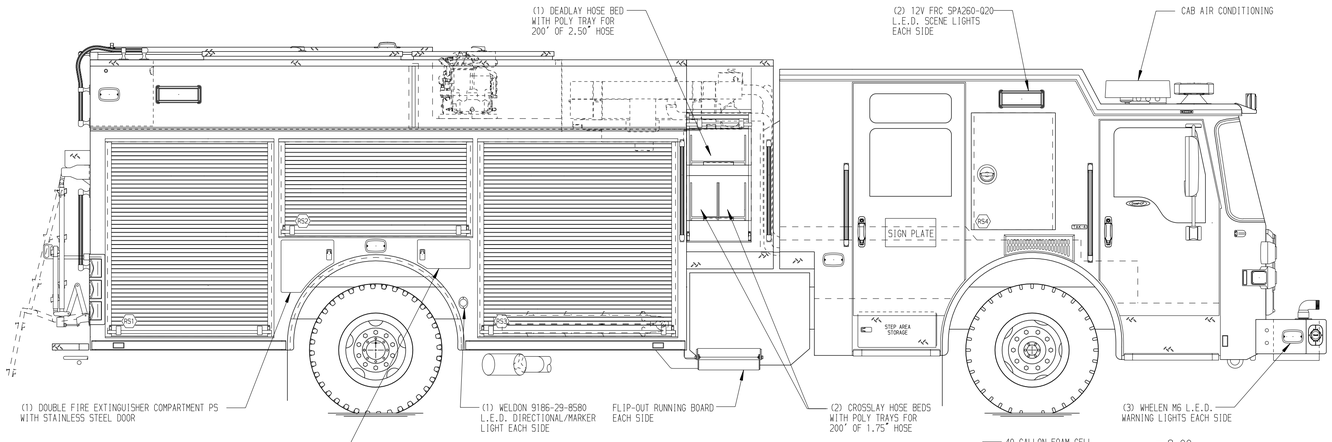

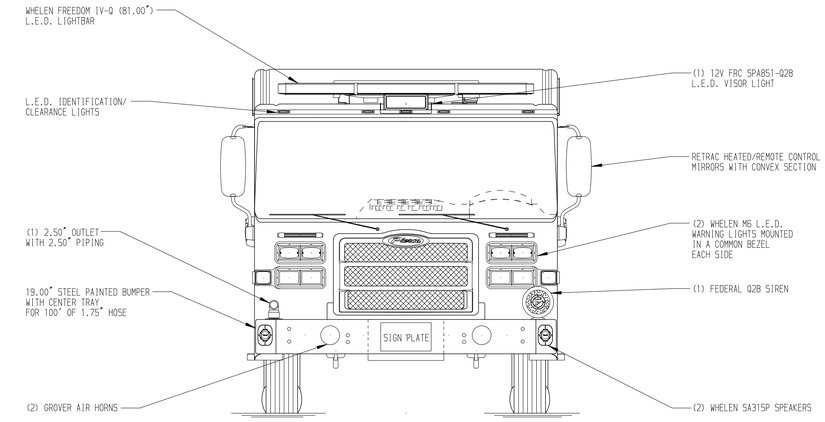

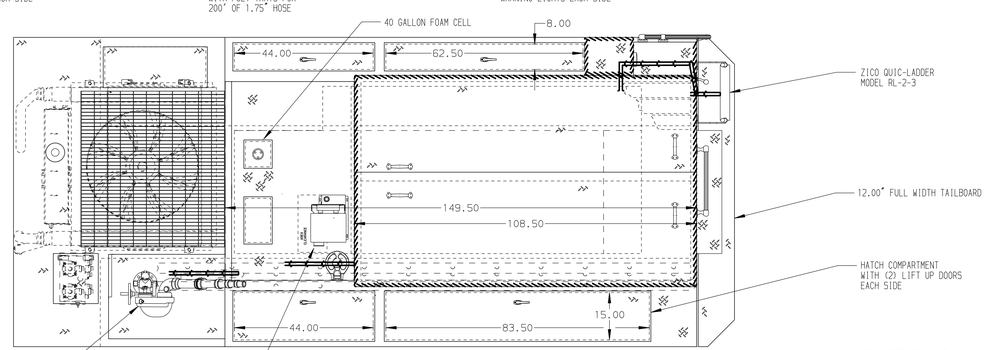

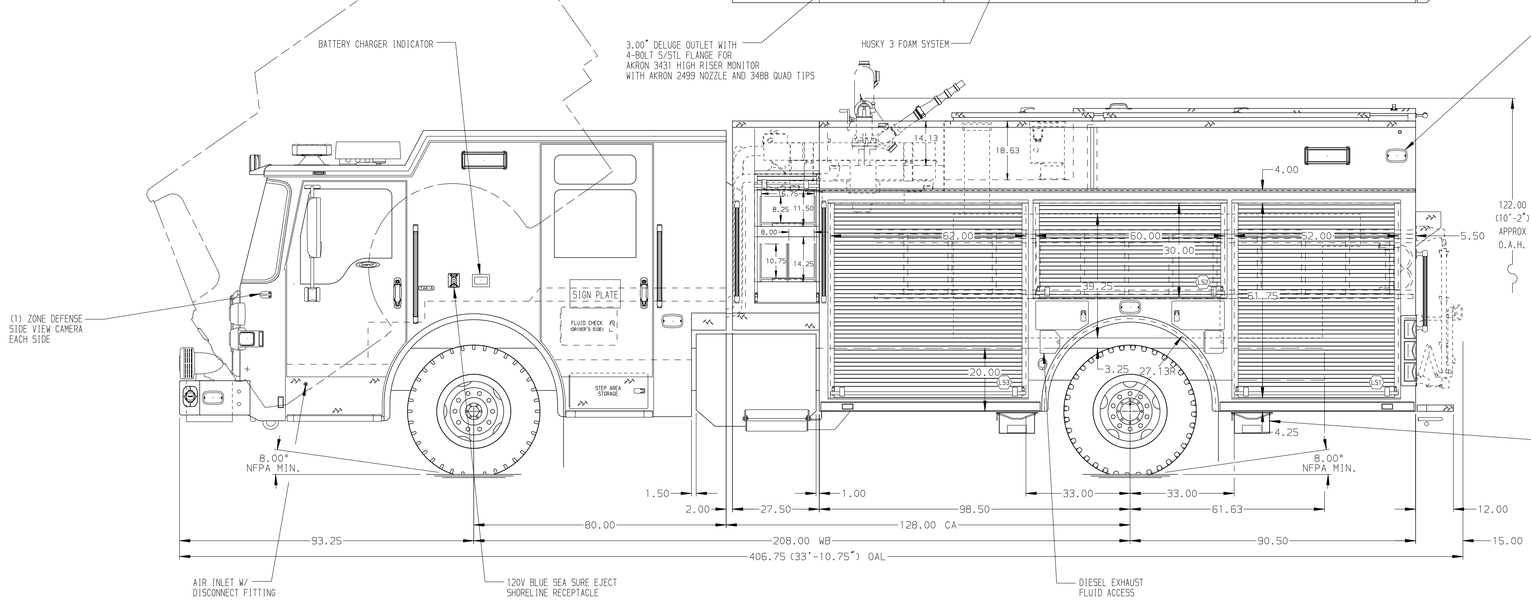

HOSEBED CAPACITIES
1. 1000' OF 5.00" D.J. POLY HOSE
2. 600' OF 3.00" D.J. POLY HOSE

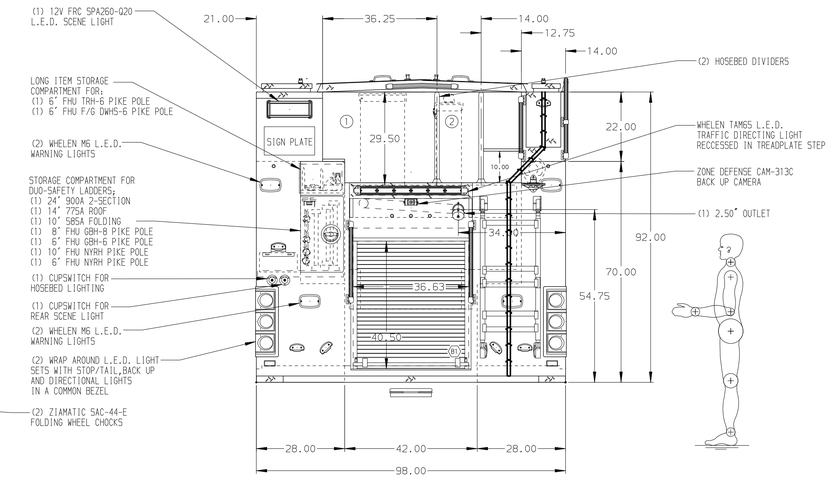

ALUMINUM BODY

SIDE ROLL & FRONTAL IMPACT PROTECTION

NOTE

DIMENSIONS SHOWN ARE APPROXIMATE AND ARE SUBJECT TO MINOR DEVIATIONS AS MAY OCCUR OR BE NECESSARY IN CONSTRUCTION.
MINOR DETAILS NOT SHOWN.

1. BATTERY CHARGER LOCATED IN DS HATCH COMPARTMENT
2. LITTLE GIANT LADDER MODEL 17 LOCATED ON FLOOR IN COMPARTMENT P3
3. PULL STRAP ON DOOR IN ALL SIDE BODY COMPARTMENTS
4. ONE ADJUSTABLE FULL WIDTH/FULL DEPTH SHELF IN COMPARTMENTS D1, D2, D3, R1; TWO IN P1 AND P3
5. ONE ADJUSTABLE LOW/SPECIAL SIZE SHELF IN COMPARTMENT D3
6. ONE PAINTED FLOOR MOUNTED SLIDE-OUT TRAY IN COMPARTMENTS D1 & P1
7. ONE SWING-OUT ALUMINUM TOOL BOARD IN COMPARTMENT P2
8. ALUMINUM PEGBOARD WITH TRACKS ON THE REAR WALL OF COMPARTMENTS D3, & P2
9. 140 CFM COMPRESSED AIR FOAM SYSTEM
10. ONE VERTICAL BOLT-IN PARTITION BETWEEN COMPARTMENTS D1-R1 & P1-R1
11. ONE VERITCAL PARITITON LOCATED IN DS HATCH COMPARTMENT
12. ALUMINUM PEGBOARD WITH TRACKS LOCATED ON SIDE WALLS OF COMPARTMENT D3
13. ONE ADJUSTABLE SLIDE-OUT TRAY LOCATED IN COMPARTMENT P3

REV	DATE	BY	CH
V	03JAN18	AMI	MSA
V	25SEP18	VAJ	MSA
V	04SEP18	AMI	MSA
V	30AUG18	AMI	MSA
V	12JUL18	AMI	CDU

CHASSIS DATA
MAKE: PIERCE
MODEL: DASH CF

Pierce MANUFACTURING INC.

TITLE: 1500-D-750 GAL POLY W/40 GAL FOAM CELL, 189" PUMPER (2)XLAYS, (1)DEADLAY, DELUGE, LADDERS BESIDE TANK
FOR: LEANDER FIRE DEPARTMENT LEANDER, TEXAS
DWG NO.: 32542AD

JOB NO.	32542
SCALE	1:24
DATE	
DRAWN BY	AMI 22JUN18
CHECKED BY	CDU 26JUN18
SHEET SIZE	D
SHEET NO.	1 OF 1

View File Created 04-JAN-2019 13:02:08