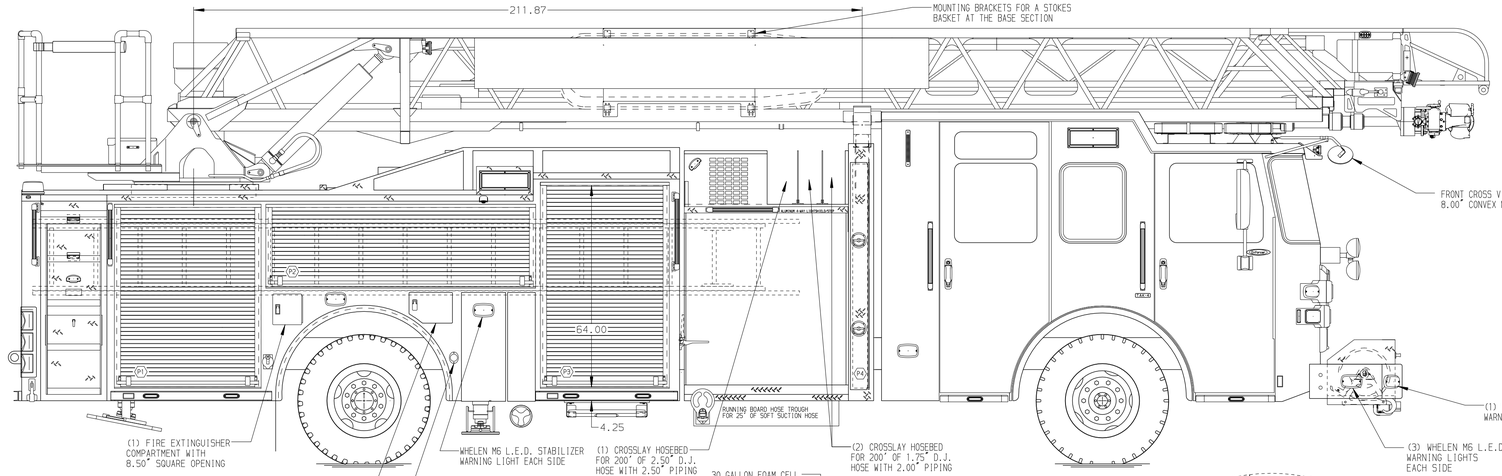

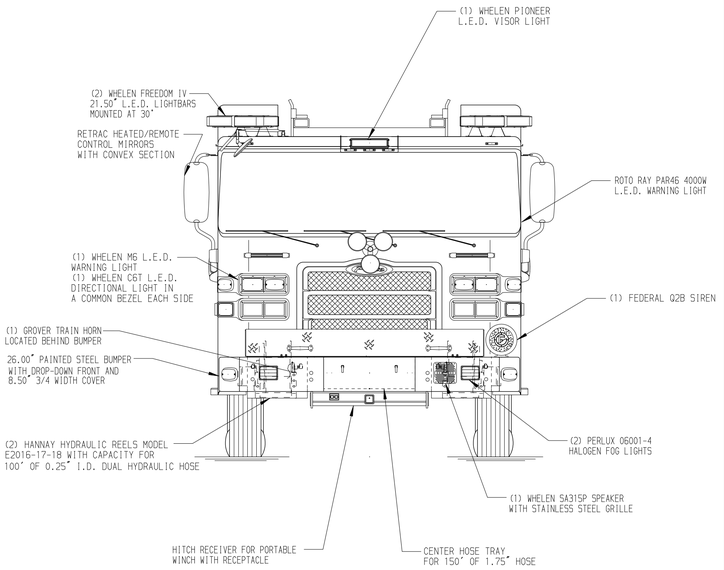

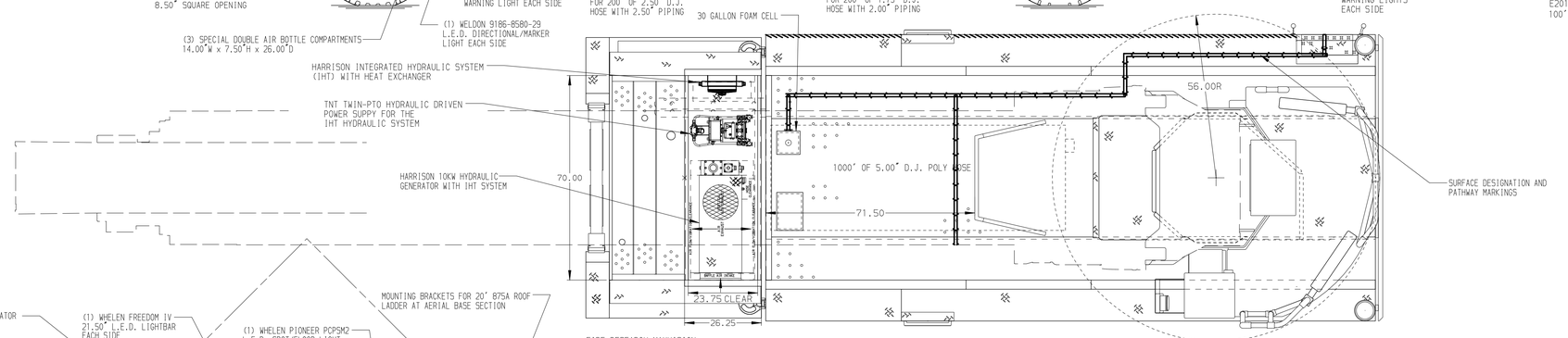

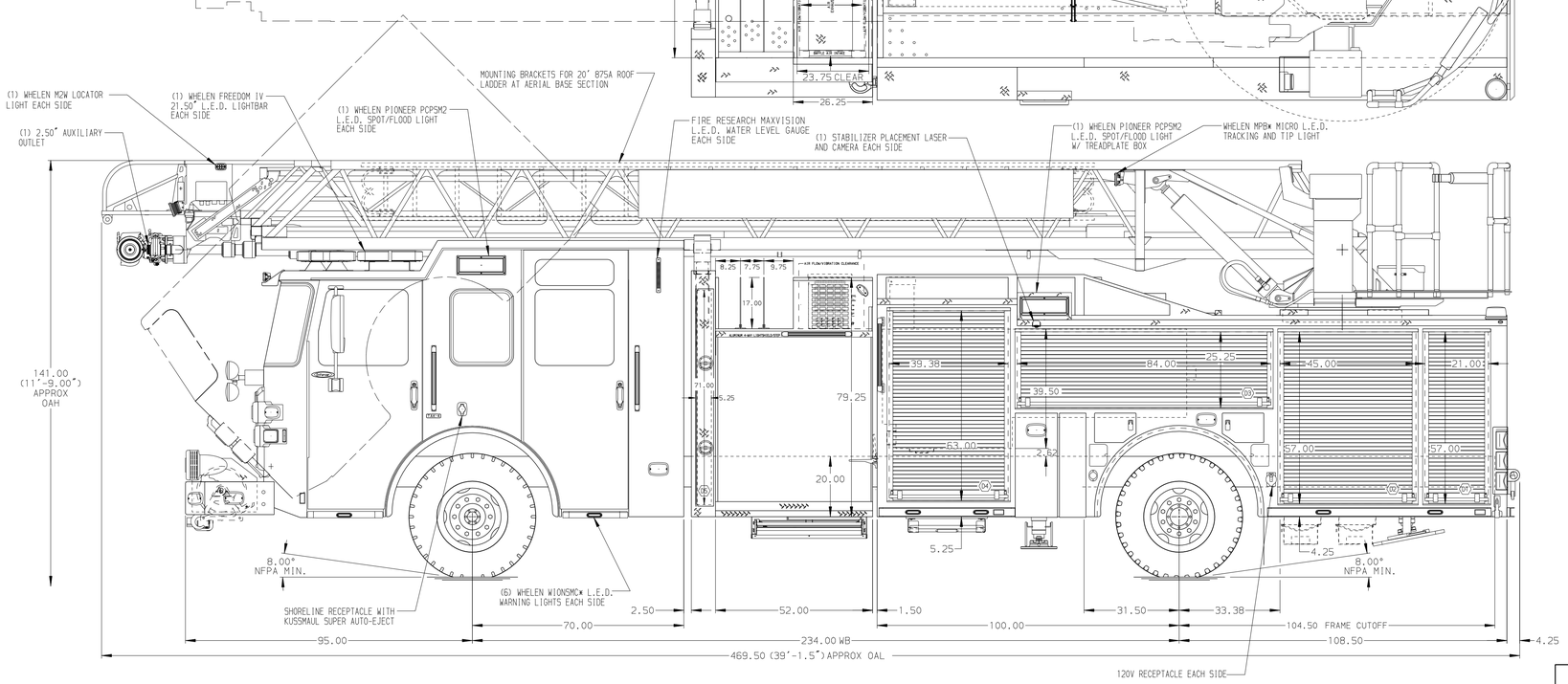

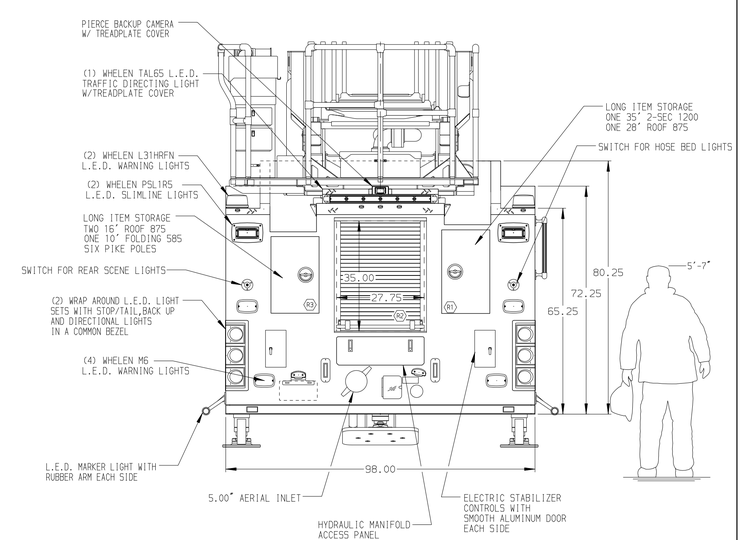

ALUMINUM BODY

NOTE

DIMENSIONS SHOWN ARE APPROXIMATE AND ARE SUBJECT TO MINOR DEVIATIONS AS MAY OCCUR OR BE NECESSARY IN CONSTRUCTION.
MINOR DETAILS NOT SHOWN.

1. DUAL L.E.D. LIGHT STRIPS LOCATED IN HOSE BED
2. ONSPOT AUTOMATIC TIRE CHAINS TO BE PROVIDED AT REAR
3. AIR INLET WITH DISCONNECT COUPLING IN THE DRIVER SIDE STEPWELL
4. BATTERY CHARGER LOCATED BEHIND DRIVER'S SEAT
5. BATTERY CHARGE INDICATOR LOCATED ON THE DRIVER SIDE SEAT RISER
6. ADJUSTABLE SHELVES IN COMPARTMENTS TBD
7. ONE FLOOR MOUNTED SLIDE-OUT TRAY IN COMPARTMENTS D1 & P1
8. NON-RAISED AERIAL PEDESTAL
9. 1500 GPM HIGH FLOW WATERWAY
10. ZIAMATIC SCBA HOLDER BRACKET LOCATED IN COMPARTMENT D3
11. AIR OUTLET WITH SHUT OFF VALVE LOCATED ON DRIVER'S SIDE PUMP PANEL
12. CIRCUIT BREAKER PANEL IN COMPARTMENT D3
13. ONE SWING-OUT ALUMINUM TOOL BOARD IN COMPARTMENTS D2 & P2
14. CTECH DRAWER ASSEMBLY IN COMPARTMENT D3
15. 2-WAY INTERCOM SYSTEM BETWEEN AERIAL TIP AND TURNTABLE
16. LIFTING EYE ROPE RESCUE ATTACHMENT AT AERIAL TIP
17. TRIDENT FOLDING STEPS ON AERIAL DEVICE
18. ONE "L" SHAPED PARTITION IN COMPARTMENTS D1,D3 & P1
19. NO LIMITED RETRACTION

REV	DATE	BY	CH
▽	-	-	-

CHASSIS DATA
MAKE: PIERCE
MODEL: ENFORCER

CUSTOMER APPROVAL
APPROVED BY: _____
DATE: _____

Pierce MANUFACTURING INC.

TITLE: 107' ASCENDANT AERIAL LADDER AND BODY ASSEMBLY
430 GALLON WATERTANK- 400 GAL WATER/30 GAL FOAM
FOR: CITY OF SANDY SPRINGS
SANDY SPRINGS, GA
DWG NO. 32580AD

JOB NO.	32580
SCALE	1:24
DATE	
DRAWN BY	SVA
	24APR18
CHECKED BY	CRI
	27APR18
SHEET SIZE	D
SHEET NO.	1 OF 1

View File Created 27-APR-2018 10:45:41