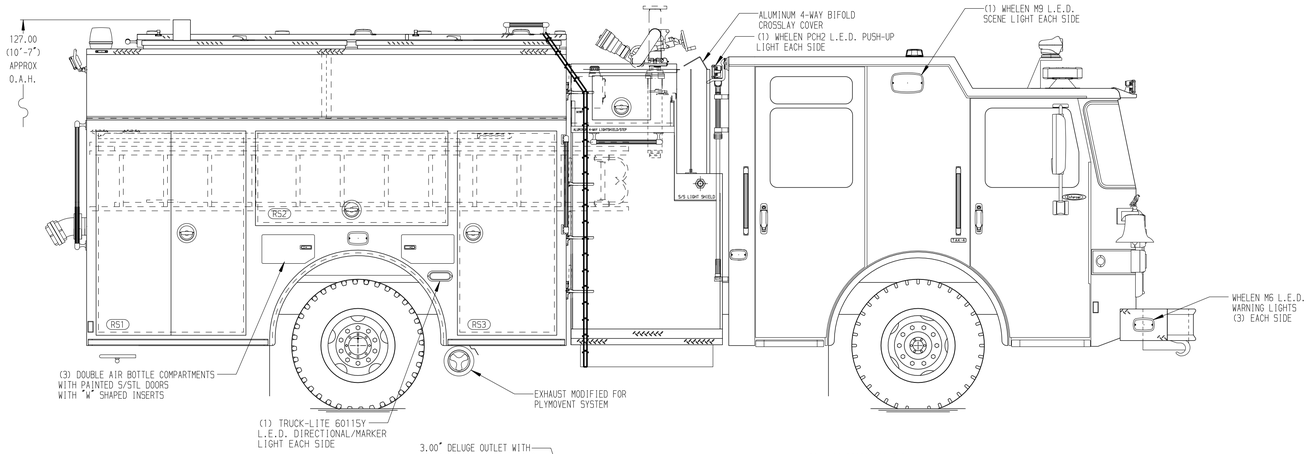

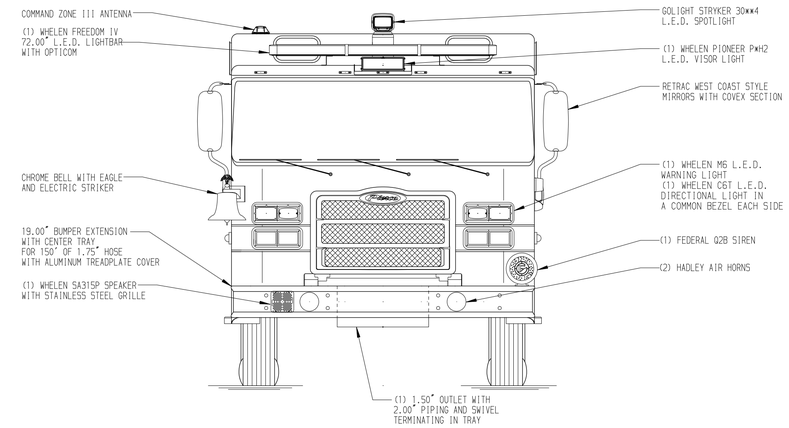

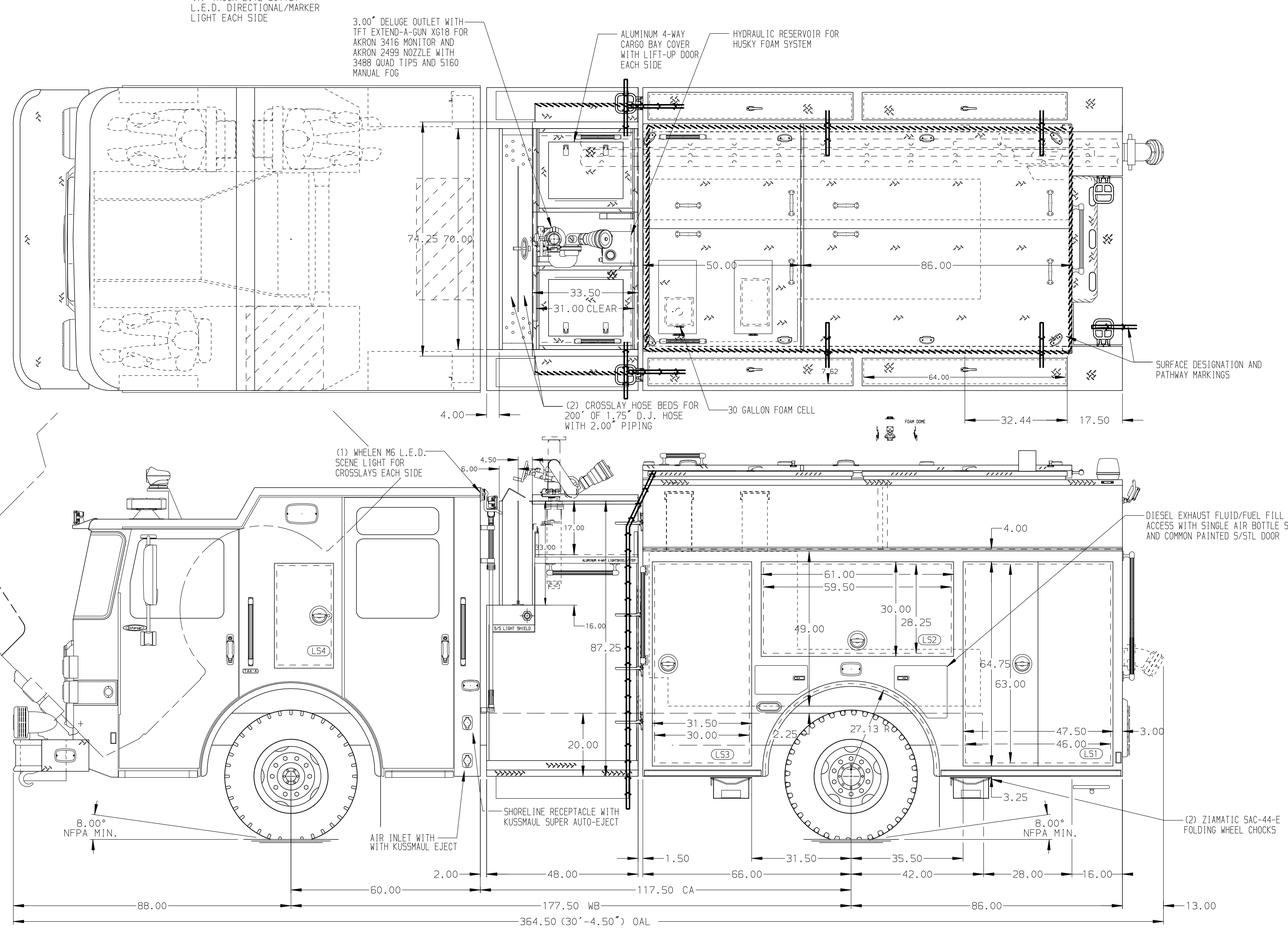

HOSEBED CAPACITIES

1. 500' OF 1.75" D.J. HOSE
2. 500' OF 2.50" D.J. HOSE
3. BACKBOARD STORAGE
4. 1000' OF 4.00" D.J. HOSE
5. (2) 50' BUNDLES OF 2.50" HOSE
6. (1) 150' BUNDLE OF 2.50" HOSE
7. (1) 150' BUNDLE OF 1.75" HOSE

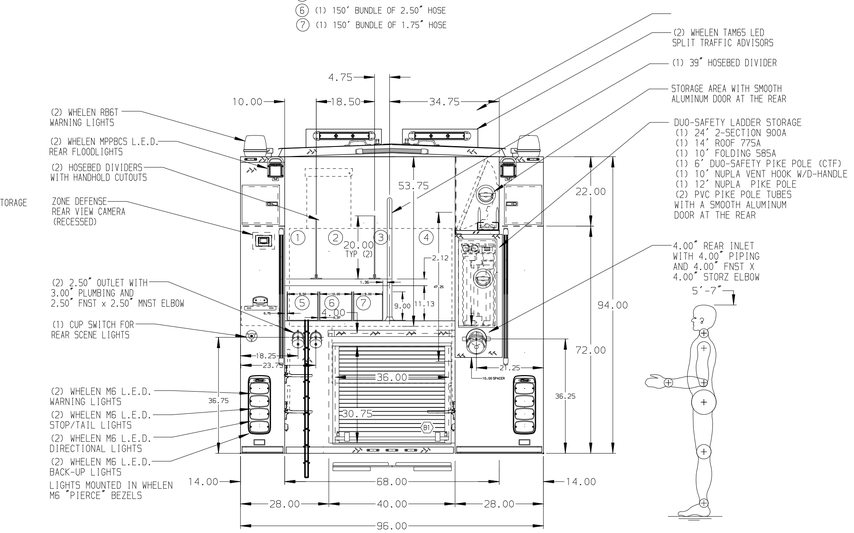

ALUMINUM BODY | MAXIMUM O.A.L. 390.00" | MAXIMUM O.A.H. 127.00" | SIDE ROLL AND FRONTAL IMPACT PROTECTION

NOTE

DIMENSIONS SHOWN ARE APPROXIMATE AND ARE SUBJECT TO MINOR DEVIATIONS AS MAY OCCUR OR BE NECESSARY IN CONSTRUCTION.
MINOR DETAILS NOT SHOWN.

1. ALUMINUM 4-WAY ON RAISED CAB ROOF
2. BATTERY CHARGER LOCATED IN COMPARTMENT LS3
3. BATTERY CHARGE INDICATOR LOCATED ON DRIVER'S SEAT RISER
4. S/STL SCUFFPLATE AROUND AIR BOTTLE COMPARTMENTS AND FUEL FILL OPENINGS
5. PULL STRAP ON DOOR IN COMPARTMENTS LS2 & RS2
6. S/STL SCUFFPLATE ON BOTTOM EDGE OF DOOR FRAMING OF ALL COMPARTMENTS EXCEPT B1
7. S/STL SCUFFPLATE INTERIOR OF DOOR IN EACH COMPARTMENT DOOR EXCEPT B1
8. REVERSED HINGED DOOR ON COMPARTMENT LS3
9. ONE ADJUSTABLE SLIDE-OUT TRAY IN COMPARTMENTS LS3 & B1
10. ONE FLOOR MOUNTED SLIDE-OUT TRAY IN COMPARTMENT B1
11. ALUMINUM PEGBOARD WITH TRACKS ON THE BACK WALL OF COMPARTMENTS LS2 & RS2
12. ONE ADJUSTABLE FULL WIDTH/DEPTH SHELF IN COMPARTMENT LS3; TWO IN LS1 & RS1; THREE IN RS3
13. DUST FILTER ON LOUVERS IN COMPARTMENT RS3
14. ONE120V NEMA DUPLEX RECEPTACLE IN COMPARTMENT LS1, RS1 AND RS3

REV	DATE	BY	CH
V	20NOV18	KLE	MSA
V	29OCT18	LME	WKL
V	26OCT18	LME	MSA

CHASSIS DATA
MAKE: PIERCE
MODEL: ENFORCER

Pierce MANUFACTURING INC.

TITLE: 1500-D-500P W/30 GAL FOAM,152" BODY, PUMPER (2)XLAYS, LADDERS BESIDE TANK, DELUGE
FOR: MERCER ISLAND FIRE DEPARTMENT, MERCER ISLAND, WASHINGTON
DWG NO.: 32678AD

JOB NO.	32678
SCALE	1:24
DATE	
DRAWN BY	LME 09JUL18
CHECKED BY	CCA 10JUL18
SHEET SIZE	D
SHEET NO.	1 OF 1

View File Created 27-NOV-2018 09:28:30