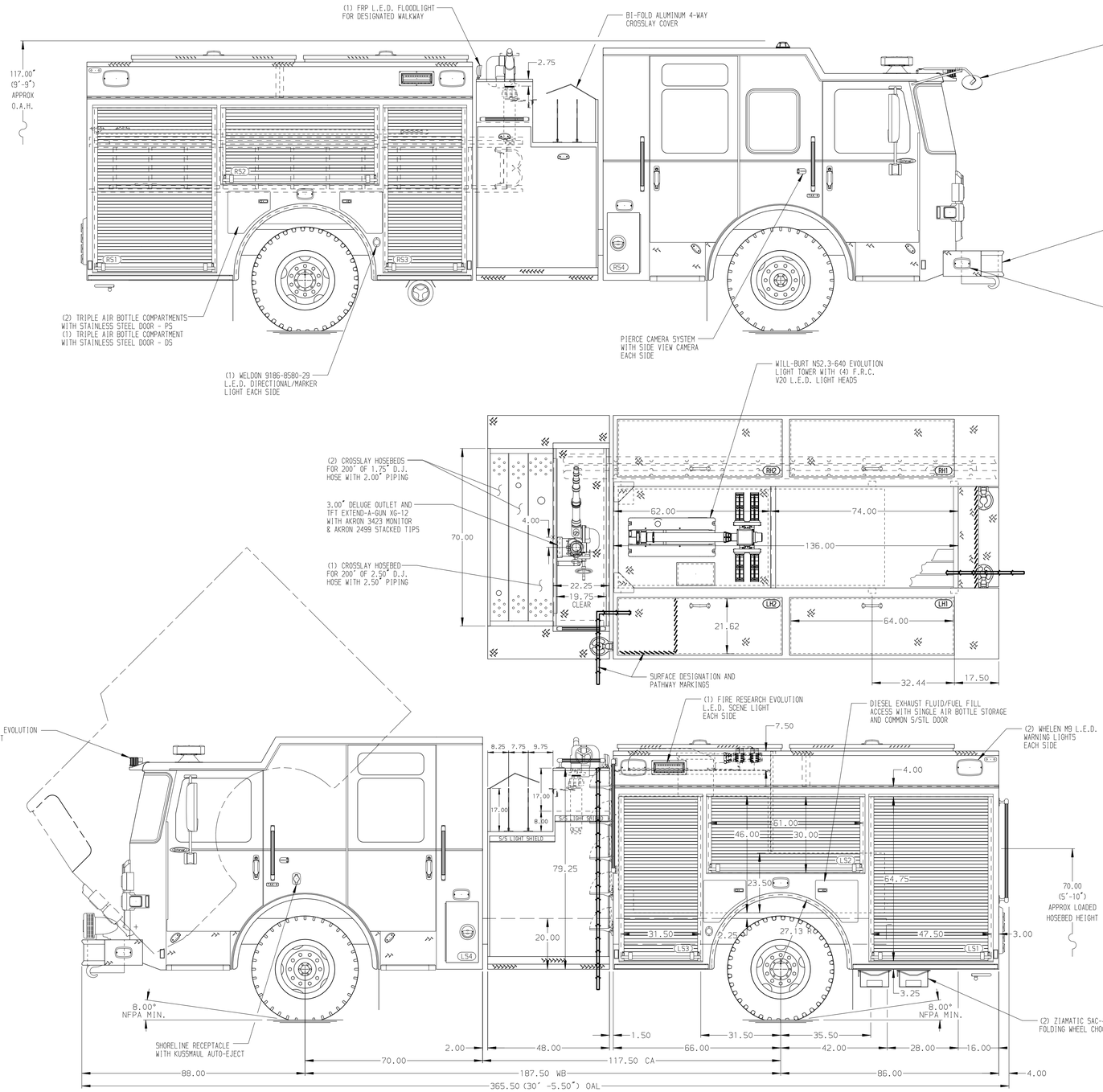

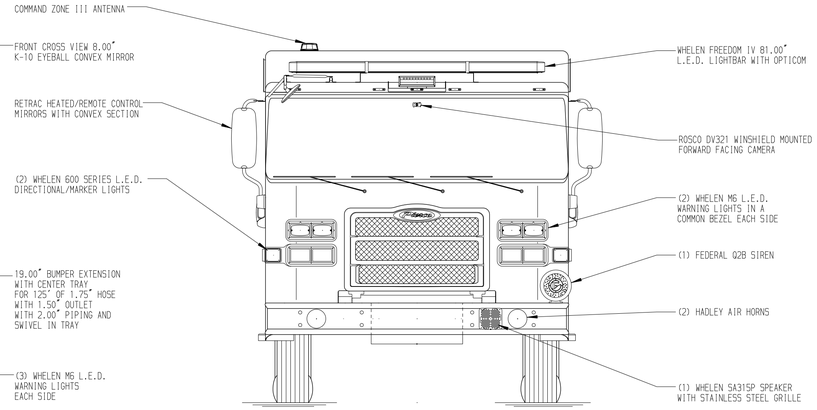

HOSEBED CAPACITIES

1. 300' OF 3.00" D.J. HOSE
2. 700' OF 4.00" D.J. HOSE
3. 300' OF 1.75" D.J. HOSE

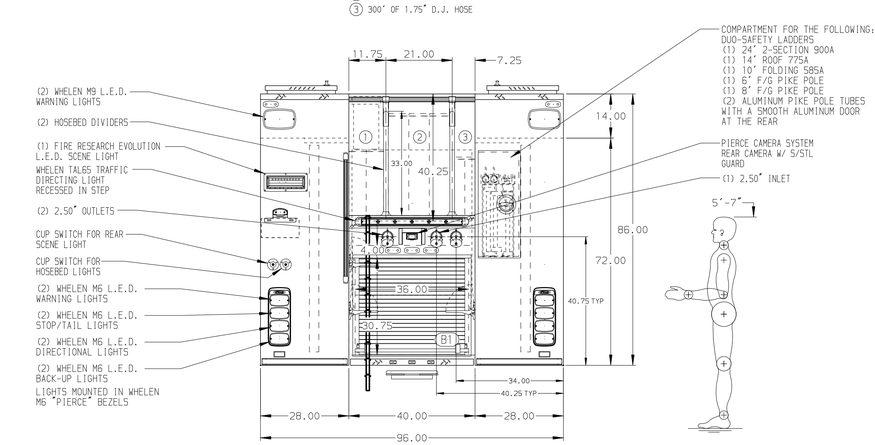

ALUMINUM BODY

MAXIMUM O.A.H. 117.00"

SIDE ROLL AND FRONTAL IMPACT PROTECTION

NOTE

DIMENSIONS SHOWN ARE APPROXIMATE AND ARE SUBJECT TO MINOR DEVIATIONS AS MAY OCCUR OR BE NECESSARY IN CONSTRUCTION.
MINOR DETAILS NOT SHOWN.

1. ONSPOT AUTOMATIC TIRE CHAINS TO BE PROVIDED AT REAR
2. BATTERY CHARGER LOCATED BEHIND DRIVER'S SEAT
3. BATTERY CHARGE INDICATOR LOCATED ON DRIVER'S SEAT RISER
4. DUAL L.E.D. LIGHT STRIPS LOCATED IN HOSE BED
5. DRIP PAN GUARD FOR ROLL-UP DOOR LOCATED IN EACH BODY COMPARTMENT
6. ONE ADJUSTABLE SLIDE-OUT TRAY IN COMPARTMENT LS1
7. ONE ADJUSTABLE TILTING SLIDE-OUT TRAY IN COMPARTMENT LS2
8. ONE FLOOR MOUNTED SLIDE-OUT TRAY IN COMPARTMENT RS1, RS3, & B1
9. ONE ADJUSTABLE FULL WIDTH/FULL DEPTH SHELF IN RS1, RS2, & RS3 - TWO IN LS1 & LS3
10. ONE 20A 6-PLACE RECEPTACLE STRIP INSIDE CAB AND EMS CABINET

REV	DATE	BY	CH
5	25SEP18	GVH	DTS
4	31AUG18	GVH	CSH

CHASSIS DATA
MAKE: PIERCE
MODEL: ENFORCER

Pierce MANUFACTURING INC.

TITLE: 1500-D-500P, 152" RESCUE BODY, LADDERS THRU PS BODY SIDE CONTROL, (3) CROSSLAYS, DELUGE, LIGHT TOWER
FOR: CITY OF ALLENTOWN ALLENTOWN, PENNSYLVANIA
DWG NO.: 32684AD

JOB NO.	32684 01-02
SCALE	1:24
DATE	
DRAWN BY	CUP 10JUL18
CHECKED BY	NPA 12JUL18
SHEET SIZE	D
SHEET NO.	1 OF 1

View File Created 25-SEP-2018 14:40:08