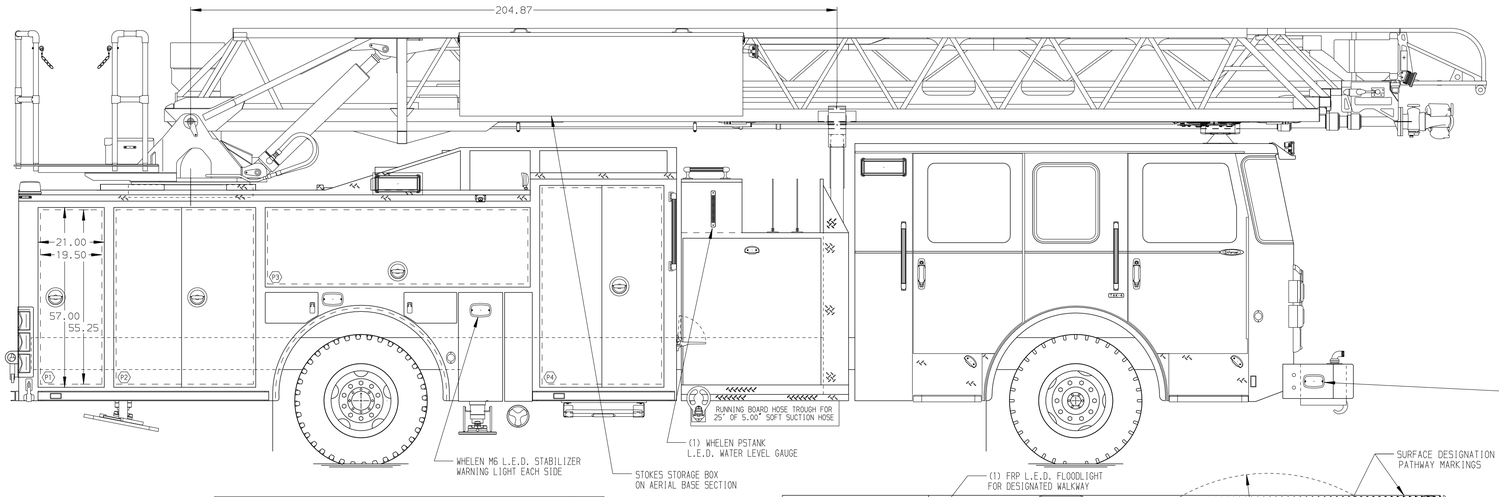

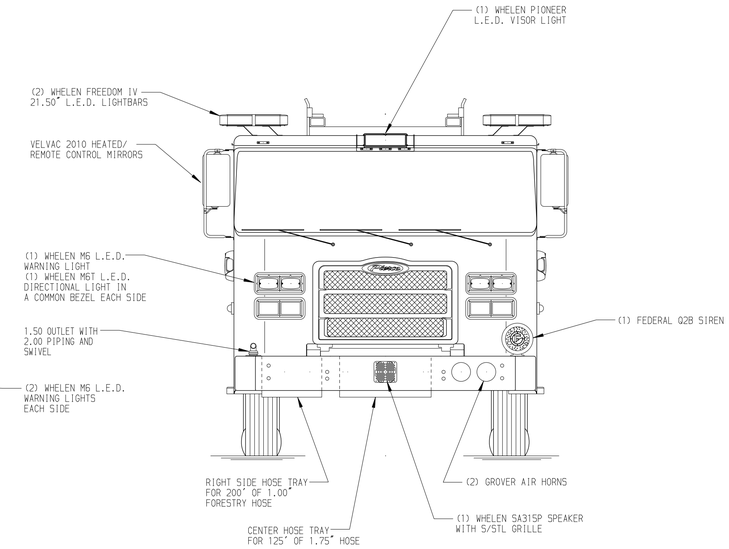

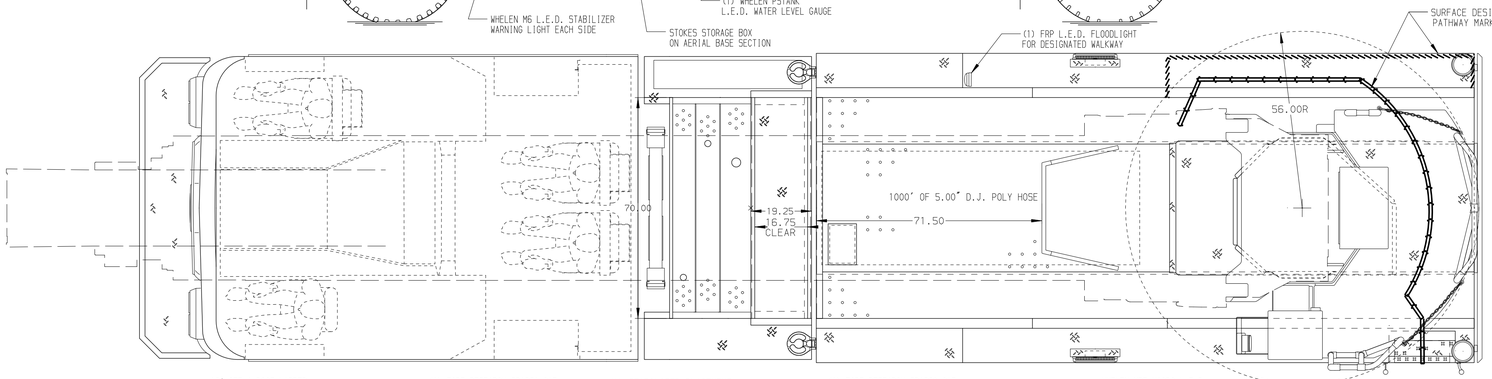

BODY	WATER TANK
107' ASL Aluminum Body	500 Gallon Poly Water Tank
COMPT,DRIVER SIDE FRONT	Foam System
Full Height Lap Forward	Foam System Not Required
COMPT,DRIVER SIDE REAR	Foam Cell
Full Height Lap Rearward	Foam Cell Not Required
COMPT,PASSENGER SIDE FRONT	
Full Height Lap Forward	
COMPT,PASSENGER SIDE REAR	
Full Height Lap Rearward	

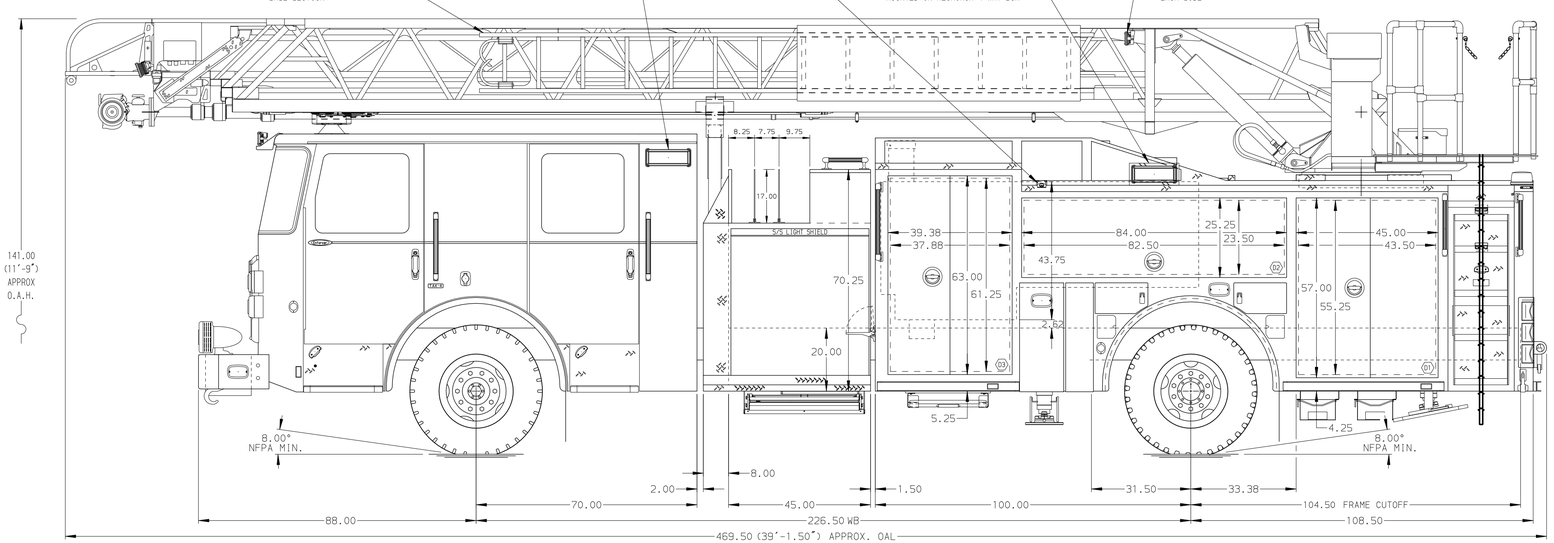

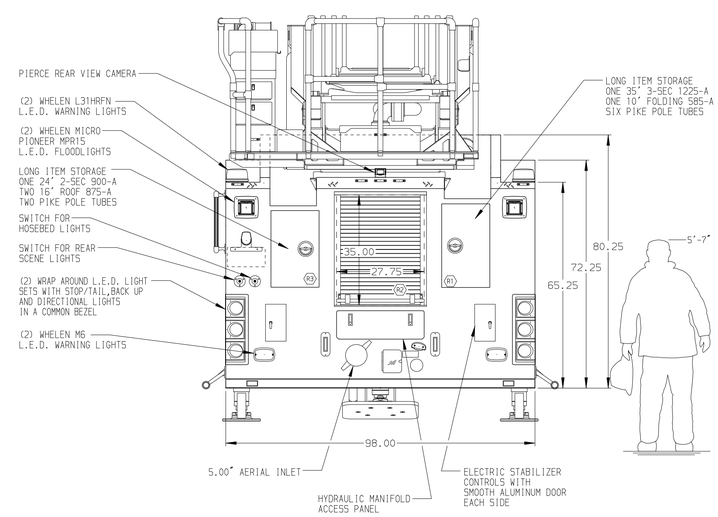

CHASSIS	CAB	AXLE,FRONT,CUSTOM	TRANSMISSION	PUMPHOUSE	CROSSLAYS,1.50"	SPEEDLAYS	SAFETY
Enforcer Chassis	7000 Enforcer Cab	22,800 Lb TAK-4 Axle	ALLison 5th Gen, 3000 EVS P	45° Control Zone Side Mount	(2) 1.50" Standard Capacity	Speedlays Not Required	Side Roll and Frontal Impact Protection
ENGINE	BUMPER	AXLE,REAR		PUMP	CROSSLAYS,2.50"	GENERATOR	
450 HP Cummins L9 Engine	19" Extended Painted Steel	33,500 Lb Meritor Axle		2000 GPM Waterous CSU	(1) 2.50" Standard Capacity	Generator Not Required	

NOTE

DIMENSIONS SHOWN ARE APPROXIMATE AND ARE SUBJECT TO MINOR DEVIATIONS AS MAY OCCUR OR BE NECESSARY IN CONSTRUCTION.
MINOR DETAILS NOT SHOWN.

1. SHORELINE RECEPTACLE WITH KUSSMAUL SUPER AUTO-EJECT LOCATED ON DRIVER SIDE OF THE CAB
2. AIR INLET WITH DISCONNECT COUPLING IN THE DRIVER SIDE STEPWELL
3. BATTERY CHARGER LOCATED IN COMPARTMENT PER SHOP ORDER
4. BATTERY CHARGE INDICATOR LOCATED ON THE DRIVER SIDE SEAT RISER
5. SIX ADJUSTABLE SHELVES IN COMPARTMENTS PER SHOP ORDER
6. TWO FLOOR MOUNTED SLIDE-OUT TRAYS IN COMPARTMENTS PER SHOP ORDER
7. ONE SWING-OUT ALUMINUM TOOL BOARD IN COMPARTMENT PER SHOP ORDER
8. TWO ALUMINUM PEGBOARDS ON BACK WALL OF COMPARTMENTS PER SHOP ORDER
9. 1500 GPM HIGH FLOW WATERWAY
10. NON-RAISED AERIAL PEDESTAL
11. NO LIMITED RETRACTION REQUIRED

REV	DATE	BY	CH
7	14SEP18	TKA	KBO
6	07AUG18	TKA	KBO

CHASSIS DATA
MAKE: PIERCE
MODEL: ENFORCER

Pierce MANUFACTURING INC.

TITLE: 107' ASCENDANT AERIAL LADDER AND BODY ASSEMBLY
-
FOR: TEXARKANA FIRE DEPARTMENT
TEXARKANA, ARKANSAS
DWG NO.: 32722AD

JOB NO.	32722
SCALE	1:24
DATE	
DRAWN BY	TKA
DATE	31MAY18
CHECKED BY	CRI
DATE	31JUL18
SHEET SIZE	D
SHEET NO.	1 OF 1

View File Created 28-SEP-2018 14:09:20