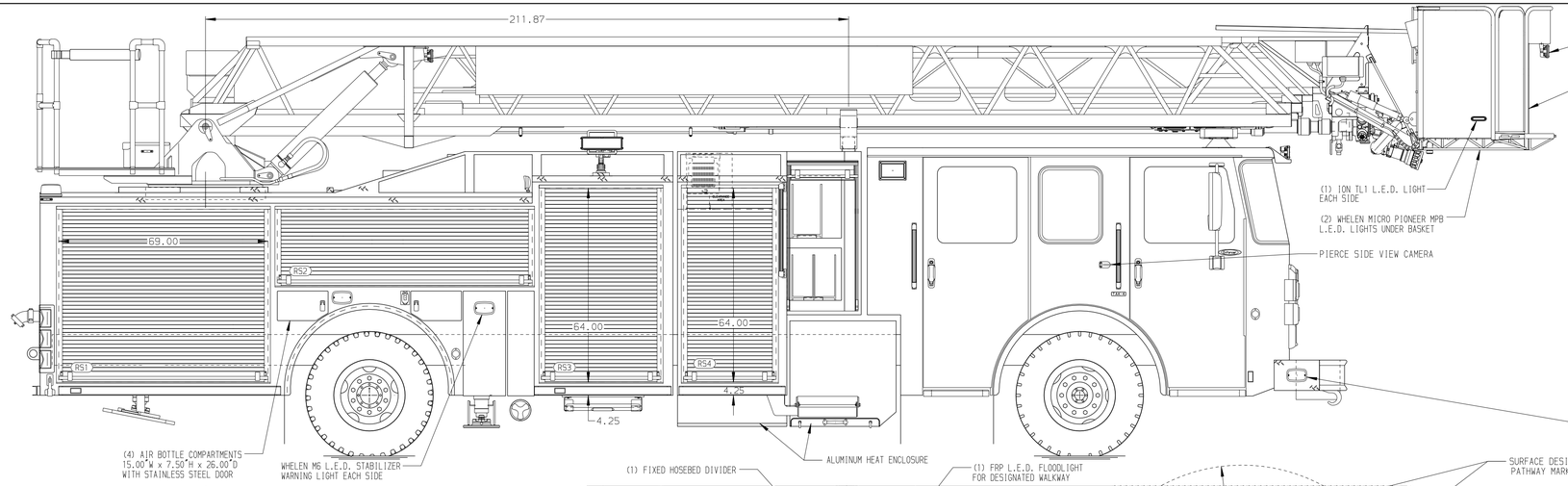

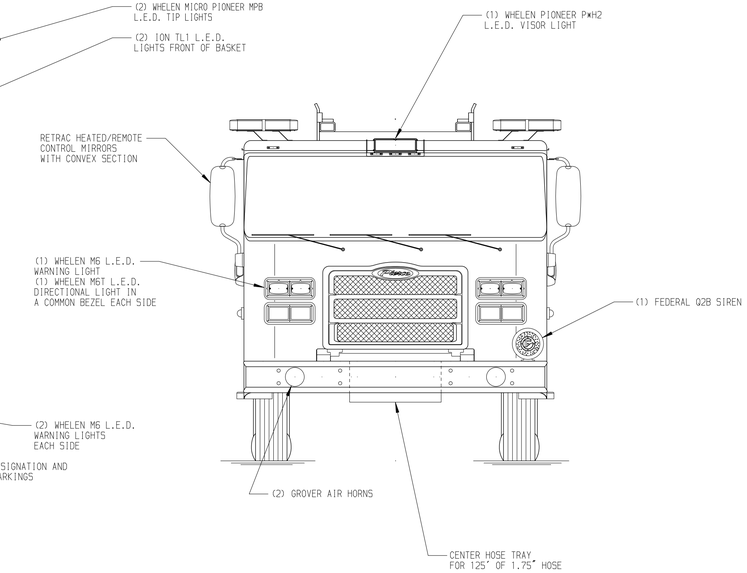

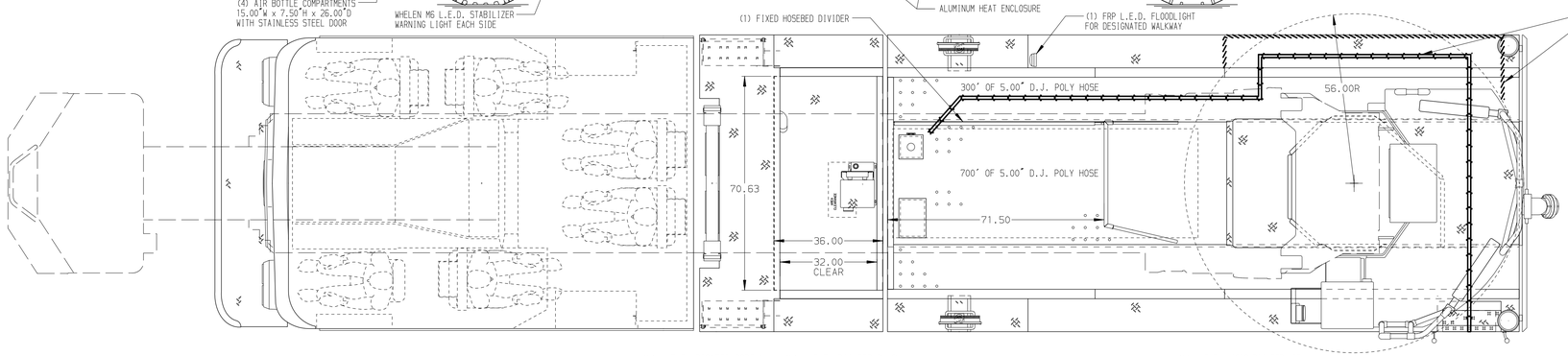

BODY	WATER TANK
110' Single Axle Platform Aluminum Body PUC	470 Gallon Poly Water Tank
COMPT,DRIVER SIDE FRONT	Foam System
Full Height Rollup Forward	Husky 3 Single Agent Foam System
COMPT,DRIVER SIDE REAR	Foam Cell
Full Height Rollup Rearward	30 Gallon Foam Cell, Reduced Water, PUC
COMPT,PASSENGER SIDE FRONT	
Full Height Rollup Forward	
COMPT,PASSENGER SIDE REAR	
Full Height Rollup Rearward	

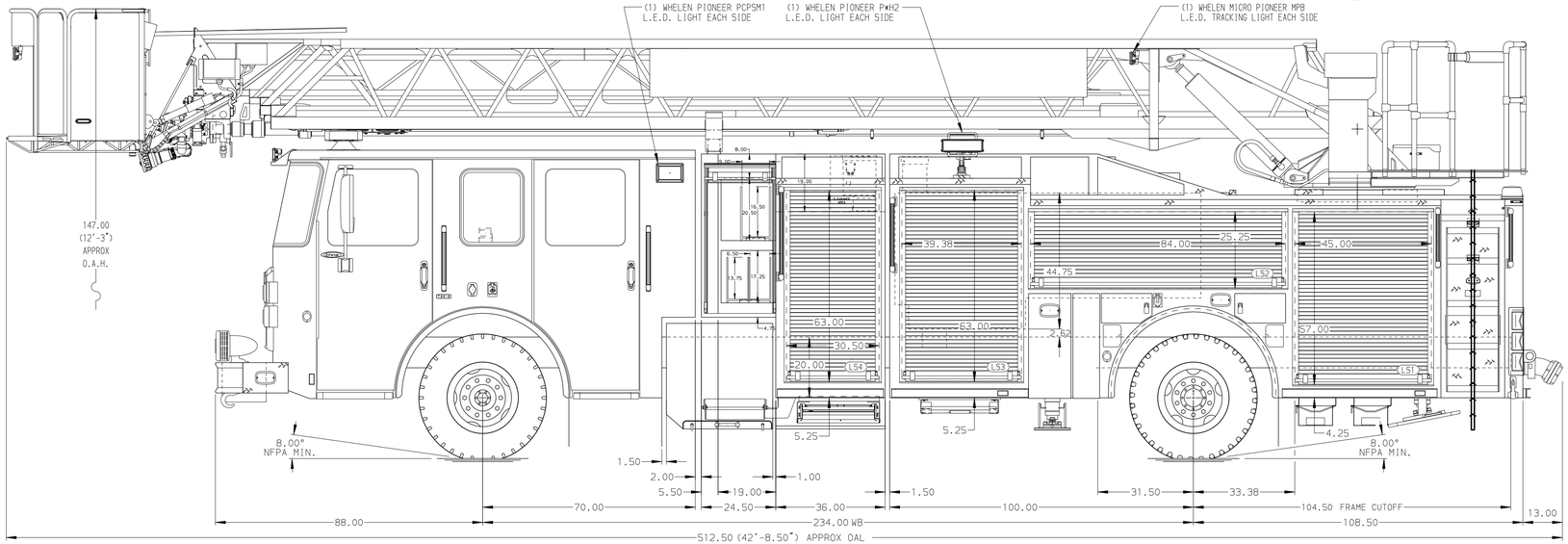

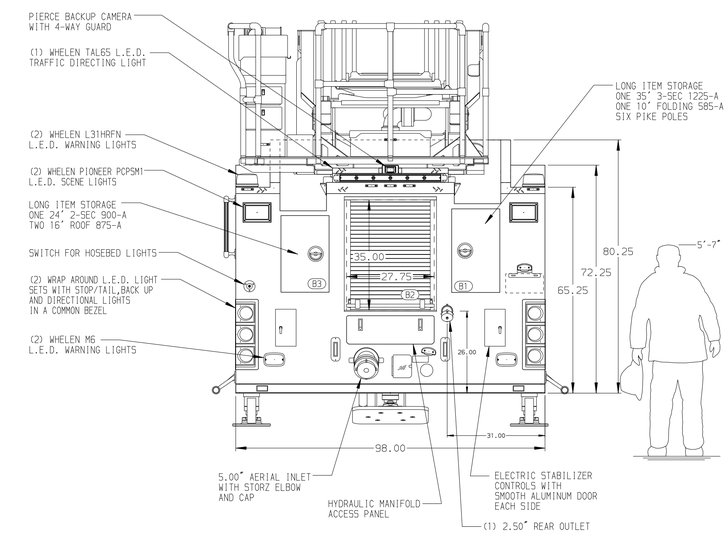

CHASSIS	CAB	AXLE,FRONT,CUSTOM	TRANSMISSION	PUMPHOUSE	CROSSLAYS,1.50"	SPEEDLAYS
Enforcer Chassis, PUC	7000 Enforcer Cab, PUC	22,800 Lb TAK-4 Axle	Allison 5th Gen, 3000 EVS P	Control Zone, PAL/PAP PUC	(2) 1.50",Full Width Trays,200'	Speedlays Not Required
ENGINE	BUMPER	AXLE,REAR		PUMP	CROSSLAYS,2.50"	GENERATOR
450 HP Cummins L9 Engine	19" Extended Stainless Steel	33,500 Lb Meritor Axle		1500 GPM Pierce PUC	(1) 2.50",Full Width Tray,200'	Generator-Customer Furnished

NOTE

DIMENSIONS SHOWN ARE APPROXIMATE AND ARE SUBJECT TO MINOR DEVIATIONS AS MAY OCCUR OR BE NECESSARY IN CONSTRUCTION.
MINOR DETAILS NOT SHOWN.

1. ONE 1.50 OUTLET WITH 2.00 PIPING AND SWIVEL LOCATED IN CENTER BUMPER TRAY
2. SHORELINE RECEPTACLE WITH KUSSMAUL SUPER AUTO-EJECT LOCATED ON DRIVER SIDE OF THE CAB
3. AIR INLET WITH KUSSMAUL AUTO-EJECT AND COVER ON DRIVER SIDE OF CAB
4. BATTERY CHARGER LOCATED BEHIND DRIVER SEAT
5. BATTERY CHARGER INDICATOR BEHIND DRIVER'S SEAT DISPLAYED THROUGH THE WINDOW
6. EIGHT ADJUSTABLE SHELVES IN COMPARTMENTS PER SHOP ORDER
7. THREE FLOOR MOUNTED SLIDE-OUT TRAYS IN COMPARTMENTS PER SHOP ORDER
8. ONE SWING-OUT ALUMINUM TOOL BOARD IN COMPARTMENT PER SHOP ORDER
9. TWO VERTICAL PARTITIONS IN COMPARTMENTS PER SHOP ORDER
10. 120V RECEPTACLE IN BODY FENDER PANEL EACH SIDE
11. CIRCUIT BREAKER PANEL LOCATED IN COMPARTMENT PER SHOP ORDER
12. NON-RAISED AERIAL PEDESTAL
13. WIRELESS MONITOR REMOTE CONTROL NEAR THE PUMP PANEL
14. 1250 GPM HIGH FLOW WATERWAY

REV	DATE	BY	CH
1	04SEP18	TKA	KBO
2	11JUL18	TKA	KBO

CHASSIS DATA
MAKE: PIERCE
MODEL: ENFORCER

Pierce MANUFACTURING INC.

TITLE: 110' ASCENDANT AERIAL PLATFORM AND BODY ASSEMBLY
-
FOR: COALDALE AND DISTRICT EMERGENCY SERVICES
COALDALE, ALBERTA, CANADA
DWG NO.: 32750AD

JOB NO.	32750
SCALE	1:24
DATE	05JUN18
DRAWN BY	TKA
CHECKED BY	CRI
CHECKED BY	11JUN18
SHEET SIZE	D
SHEET NO.	1 OF 1

View File Created 10-SEP-2018 09:33:40