Pumper, PUC

BODY
Pumper, PUC, Aluminum

CHASSIS
Enforcer Chassis, PUC

CHASSIS

AXLE, FRONT, CUSTOM
22,800 lb Meritor Axle

AXLE, REAR
27,000 lb Meritor Axle

ENGINE
450 HP Cummins L9 Engine

TRANSMISSION
Allison 5th Gen, 3000 EVS P

BUMPER
26" Extended Painted Steel

CAB
8410 Enforcer Cab, PUC

BODY

WATER TANK
750 Gallon Poly Water Tank

COMPT, PUMPER, REAR
33.50" FF Rollup Rear Compt w/Tailboard, PUC

COMPT, PUMPER, DRIVER SIDE
189" Rollup Full Height & Depth Front & Rear, PUC

COMPT, PUMPER PASS. SIDE
189" Rollup Full Height & Depth Front & Rear, PUC

FIRE SUPPRESSION

PUMPHOUSE
Control Zone, PUC

PUMP
1500 GPM Pierce PUC

CROSSLAYS, 1.50"
(2) 1.50", Full Width Poly Trays, 200'

CROSSLAYS, 2.50"
(1) 2.50", Full Width Poly Tray, 200'

GENERATOR
Generator Not Required

Foam System
Husky 3 Single Agent Foam System

Foam Cell
50 Gallon Foam Cell, Not Reduced Water, PUC

Side Roll and Frontal Impact Protection

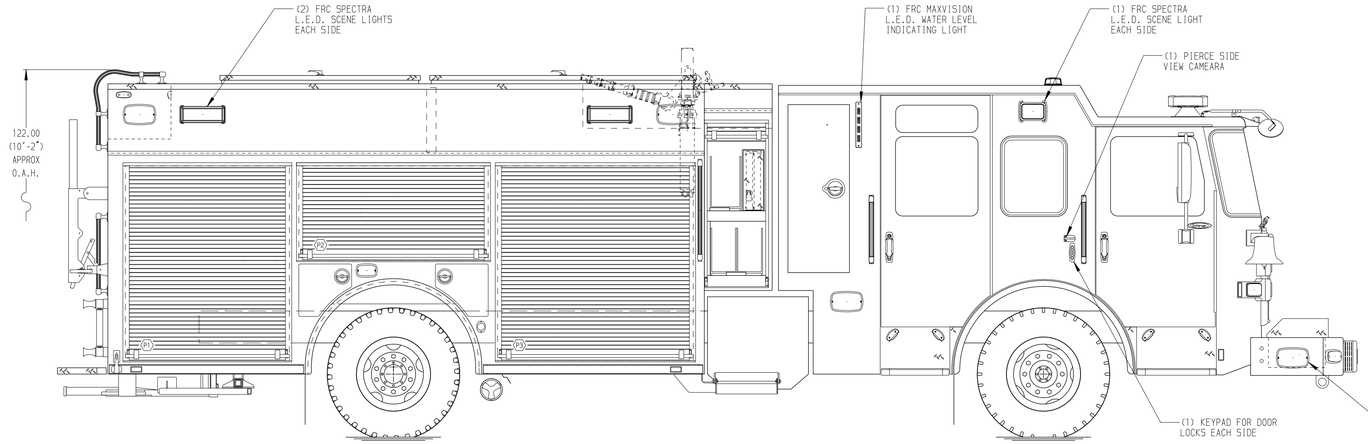

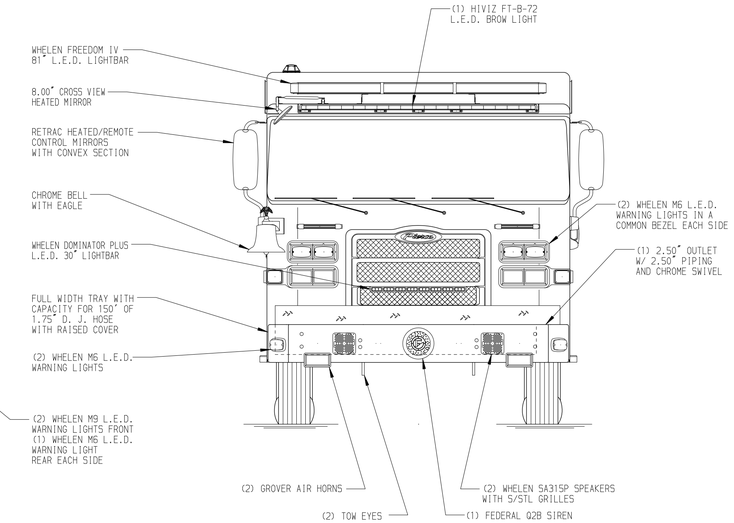

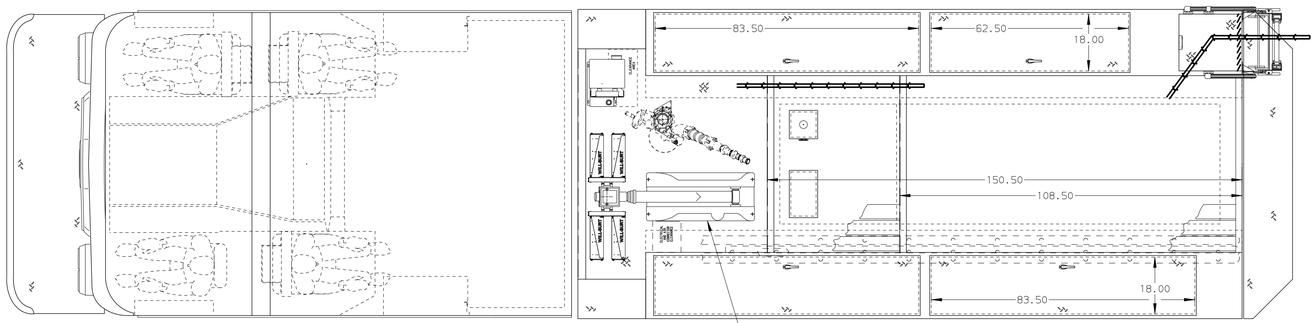

HOSEBED CAPACITY

BED 1
250' OF 3.00" D.J. POLY HOSE

BED 2
1000' OF 5.00" D.J. POLY HOSE

BED 3
250' OF 3.00" D.J. POLY HOSE

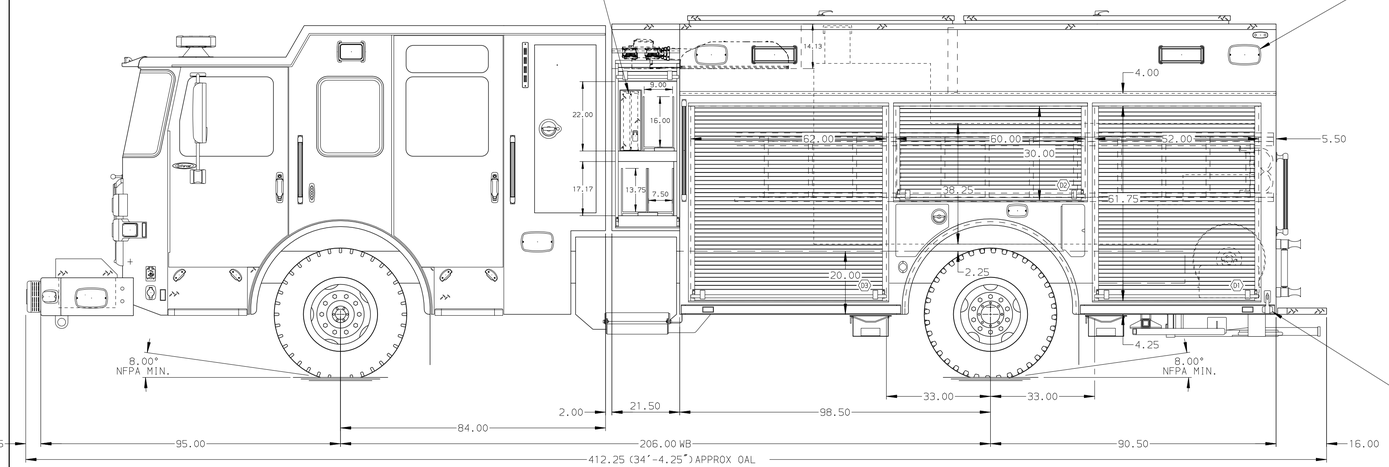

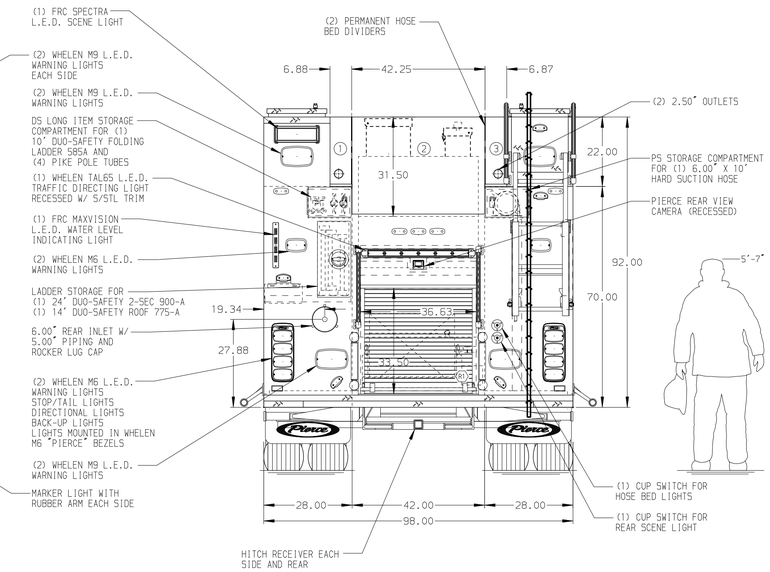

NOTE

DIMENSIONS SHOWN ARE APPROXIMATE AND ARE SUBJECT TO MINOR DEVIATIONS AS MAY OCCUR OR BE NECESSARY IN CONSTRUCTION.
MINOR DETAILS NOT SHOWN.

1. WIRING FOR AUTOMATIC TIRE CHAINS
2. SHORELINE RECEPTACLE WITH KUSSMAUL SUPER AUTO-EJECT LOCATED ON DRIVER SIDE CAB CORNER
3. AIR INLET WITH KUSSMAUL AIR EJECT WITH COVER LOCATED ON DRIVER SIDE CAB CORNER
4. AIR OUTLET WITH SHUT OFF VALVE LOCATED ON DRIVER SIDE PUMP PANEL
5. BATTERY CHARGER LOCATED BEHIND DRIVER'S SEAT
6. BATTERY CHARGE INDICATOR LOCATED ON THE DRIVER SIDE SEAT RISER
7. EIGHT ADJUSTABLE SHELVES LOCATED PER SHOP ORDER
8. TWO FLOOR MOUNTED SLIDE-OUT TRAYS LOCATED PER SHOP ORDER
9. TWO TILTING-SLIDE-OUT TRAYS LOCATED PER SHOP ORDER
10. TWO SLIDE-OUT TOOLBOARDS LOCATED PER SHOP ORDER
11. CTECH THREE DRAWER ASSEMBLY LOCATED PER SHOP ORDER
12. PARTITIONS BETWEEN COMPARTMENTS D1/R1 & P1/R1
13. ONE ADJUSTABLE SLIDE-OUT TRAY LOCATED PER SHOP ORDER
14. ONE VERTICAL PARTITION LOCATED PER SHOP ORDER
15. TWO 120V DUPLEX RECEPTACLES LOCATED PER SHOP ORDER
16. HANNAY BOOSTER REEL MODEL SBEF34-23-24 LOCATED IN R1 WITH CAPACITY FOR 200' OF 1.00" BOOSTER HOSE

REV	DATE	BY	CH
7	040CT18	COL	KBO
6	24AUG18	COL	KBO

CHASSIS DATA	
MAKE	PIERCE
MODEL	ENFORCER

Pierce MANUFACTURING INC.

TITLE	Pierce PUC Pumper Approval Drawing -	JOB NO.	32786 01-02
		SCALE 1:24	DATE
FOR	Shepherdsville Fire Department -	DRAWN BY COL	21MAY18
		CHECKED BY KBO	23MAY18
DWG NO.	32786AD	SHEET SIZE D	SHEET NO. 1 OF 1

View File Created 08-OCT-2018 08:07:32