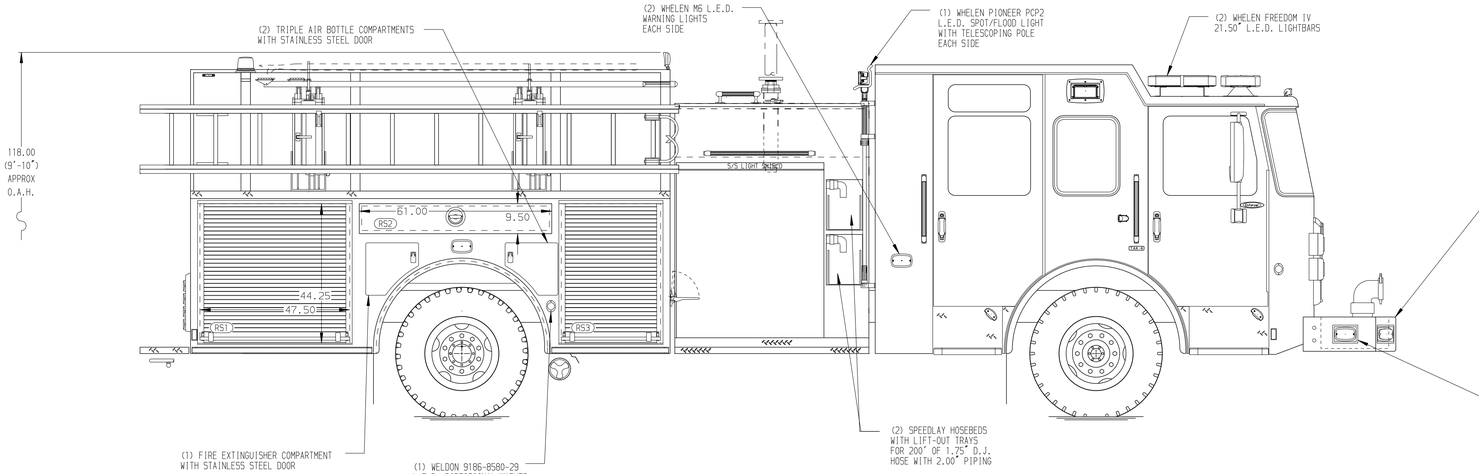

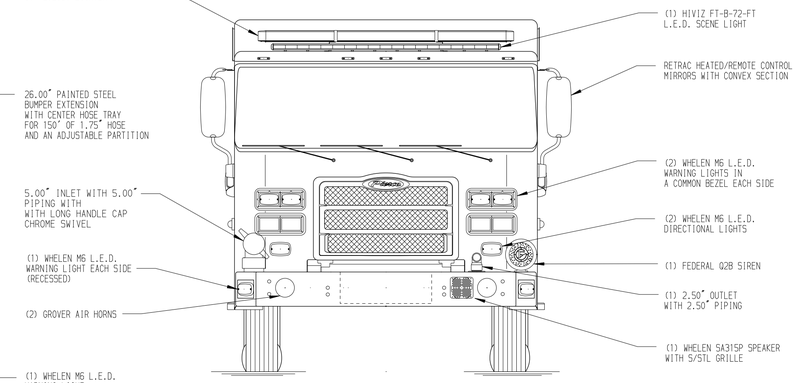

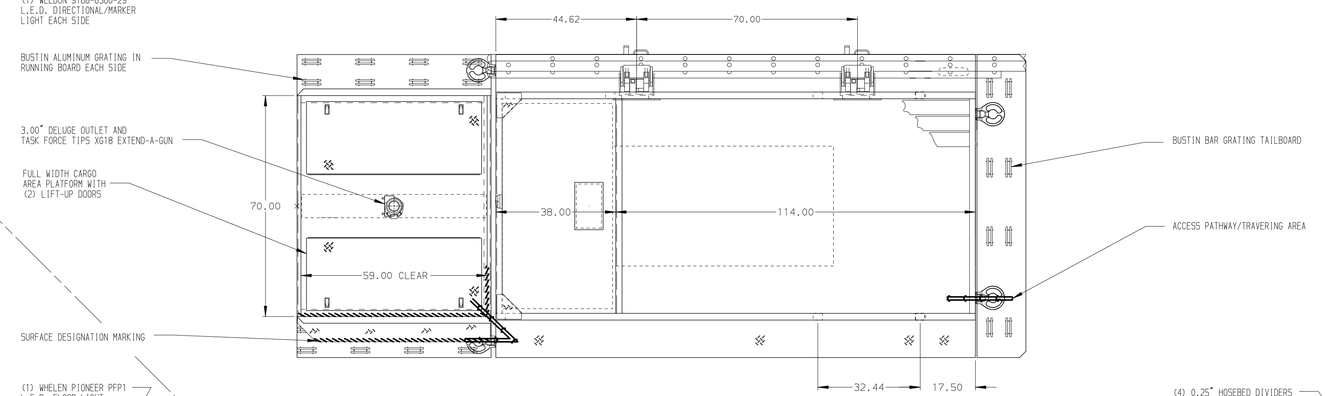

HOSEBED CAPACITIES

1. 200' OF 1.75" D.J. POLY HOSE
2. 1000' OF 5.00" D.J. POLY HOSE
3. 500' OF 3.00" D.J. POLY HOSE
4. 500' OF 3.00" D.J. POLY HOSE
5. 200' OF 2.50" D.J. POLY HOSE

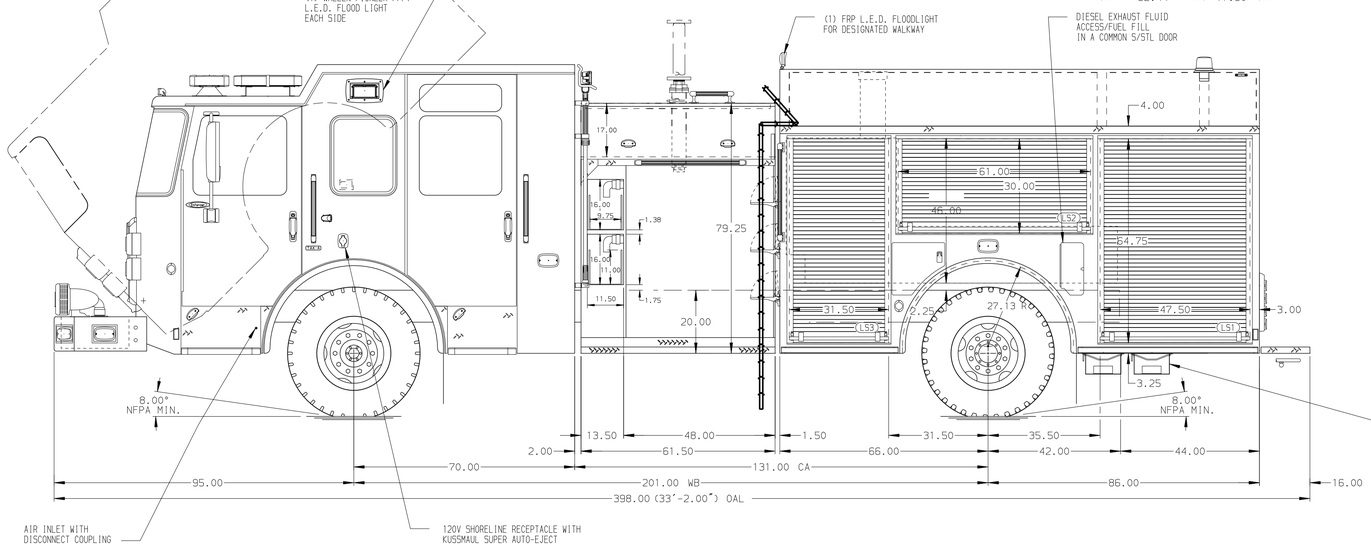

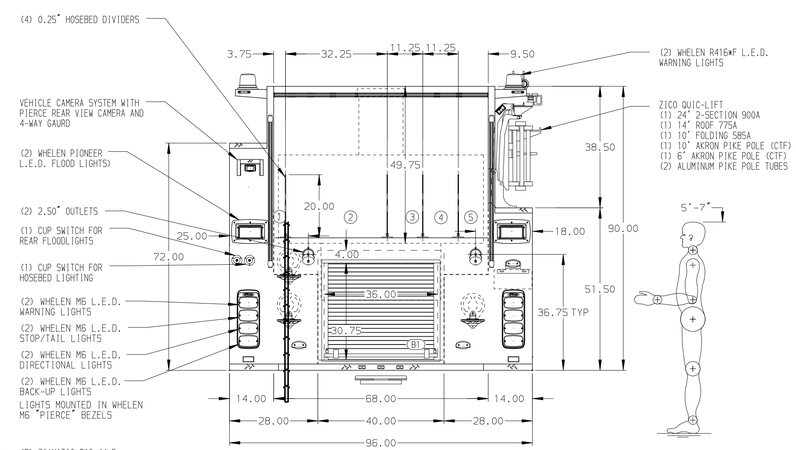

ALUMINUM BODY

NOTE

DIMENSIONS SHOWN ARE APPROXIMATE AND ARE SUBJECT TO MINOR DEVIATIONS AS MAY OCCUR OR BE NECESSARY IN CONSTRUCTION.
MINOR DETAILS NOT SHOWN.

1. BATTERY CHARGER LOCATED BEHIND DRIVER'S SEAT
2. BATTERY CHARGER INDICATOR BEHIND DRIVER'S SEAT DISPLAYED THROUGH WINDOW
3. DRIP PAN GUARD FOR ROLL-UP DOOR LOCATED LS1, LS2, LS3, RS1, RS3, & B1
4. ONE FULL WIDTH/DEPTH ADJUSTABLE SHELF LOCATED IN COMPARTMENT LS1, LS2, LS3, RS1 & RS3
5. ONE FLOOR MOUNTED SLIDE-OUT TRAY WITH 2.00" SIDES IN COMPARTMENT RS1
6. PAC TRAC ON THE REAR WALL OF COMPARTMENT LS1

REV	DATE	BY	CH
2	220CT18	MMF	MSA
1	030CT18	MMF	MSA

CHASSIS DATA
MAKE: PIERCE
MODEL: ENFORCER

Pierce MANUFACTURING INC.

TITLE: 2000-D-500P, 152" BODY, FH FRONT & REAR LS FDLER 3/4 HEIGHT RS FDLER, (2)SPEEDLAYS, ZICO QUIC-LIFT
FOR: CITY OF LAWRENCE FIRE DEPARTMENT LAWRENCE, INDIANA
DWG NO.: 32869AD

JOB NO.	32869
SCALE	1:24
DATE	
DRAWN BY	MMF 10AUG18
CHECKED BY	NPE 15AUG18
SHEET SIZE	D
SHEET NO.	1 OF 1

View File Created 26-OCT-2018 13:51:22