RIGHT SIDE COMPARTMENTS
CONTAIN THE FOLLOWING:

COMPARTMENT RS1 CONTAINS:

- (2) SHELVES,ADJUSTABLE,500LB CAP.
  STD. DEPTH,TRANSVERSE COMPT

COMPARTMENT RS2 CONTAINS:

- (2) TOOLBOARD,SLIDE-OUT,
  1/2 DEPTH W/GEN DEVICE TRACK

COMPARTMENT RS3 CONTAINS:

COMPARTMENT RS4 CONTAINS:

- (1) TRAY,SLIDE OUT,TWO WAY,TRANSVERSE
  COMPT,ADJUSTABLE HEIGHT,500# CAPACITY
- (1) RACK,STOKES BASKET STORAGE

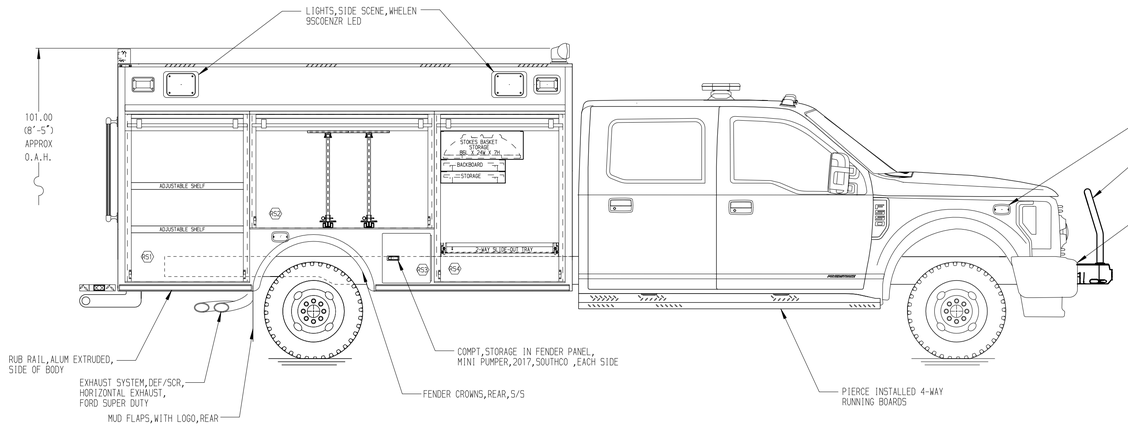

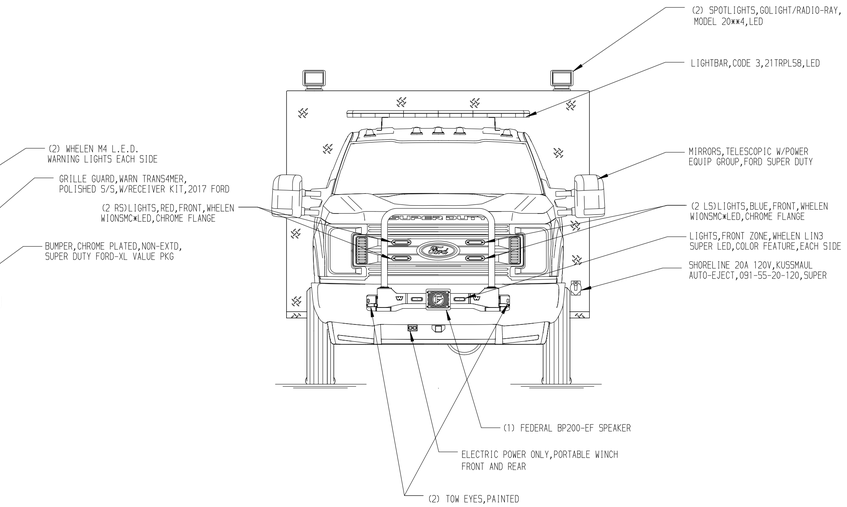

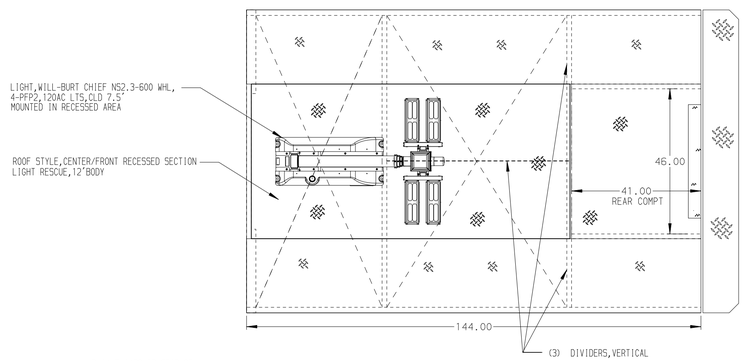

REAR COMPARTMENT R1 CONTAINS
THE FOLLOWING:

COMPARTMENT R1 CONTAINS:

- (1) TRAY SLIDE OUT,STD DEPTH,
  FLOOR MOUNTED,500LB CAPACITY

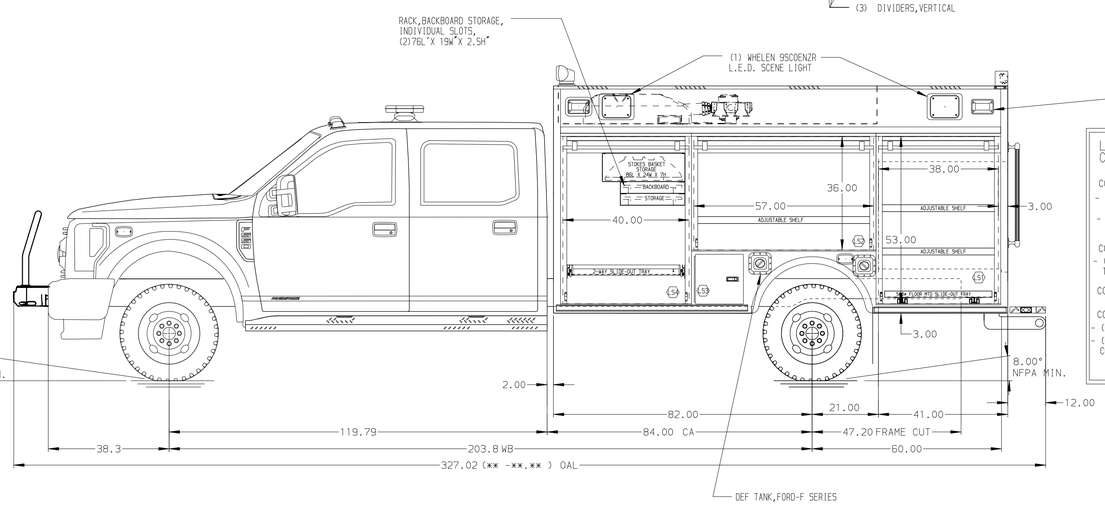

LEFT SIDE COMPARTMENTS
CONTAIN THE FOLLOWING:

COMPARTMENT LS1 CONTAINS:

- (2) SHELVES,ADJUSTABLE,500LB CAP.
  STD. DEPTH,TRANSVERSE COMPT
- (1) TRAY,FLOOR MOUNTED,
  SLIDE-OUT, 500LB,2"SIDES

COMPARTMENT LS2 CONTAINS:

- (2) SHELVES,ADJUSTABLE,
  1/2 DEPTH OF TRANSVERSE COMPT

COMPARTMENT LS3 CONTAINS:

COMPARTMENT LS4 CONTAINS:

- (1) RACK,STOKES BASKET STORAGE
- (1) TRAY,SLIDE OUT,TWO WAY,TRANSVERSE
  COMPT,ADJUSTABLE HEIGHT,500# CAPACITY

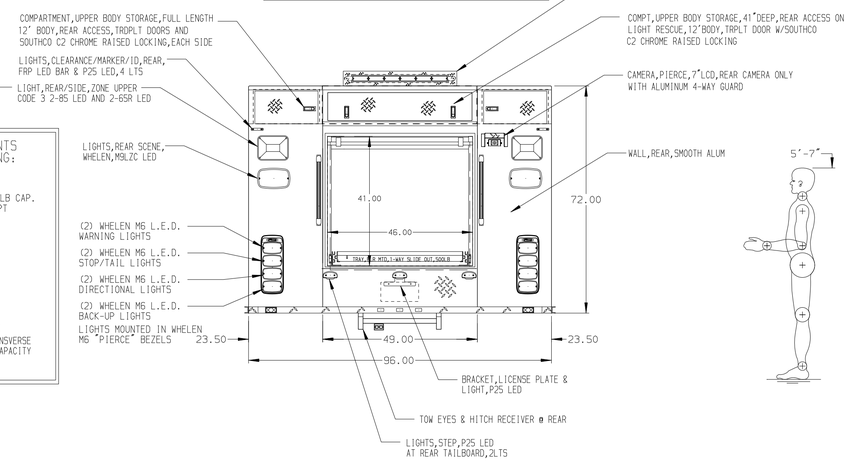

ALUMINUM BODY

NOTE

DIMENSIONS SHOWN ARE APPROXIMATE
AND ARE SUBJECT TO MINOR DEVIATIONS
AS MAY OCCUR OR BE NECESSARY IN
CONSTRUCTION.
MINOR DETAILS NOT SHOWN.

REV.	DATE	BY	CHK'D	
				CHASSIS DATA
7	23JAN19	JAF	AJA	CHASSIS
6	10DEC18	JAF	AJA	FORD
5	17SEP18	RWI	JAF	MODEL F-550 4X4

Pierce MANUFACTURING INC.
BRADENTON, FLORIDA

TITLE	12' RESCUE,NON-WALK-IN –	JOB NO. 32919	DATE 17AUG18
		SCALE 1:24	DRAWN BY JAF
FOR	TONICA VOL. FIRE DEPARTMENT TONICA,ILLINOIS		23AUG18
			CHK'D BY RWI
DRWG. NO.	32919AD	SHEET NO. 1 OF 1	SHEET SIZE D

View File Created 24-JAN-2019 08:23:27