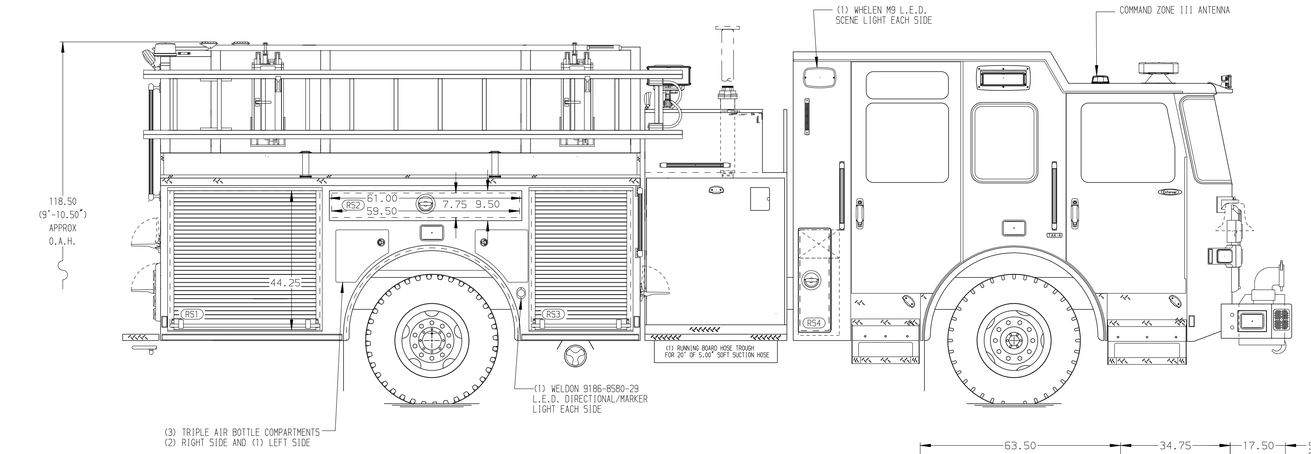

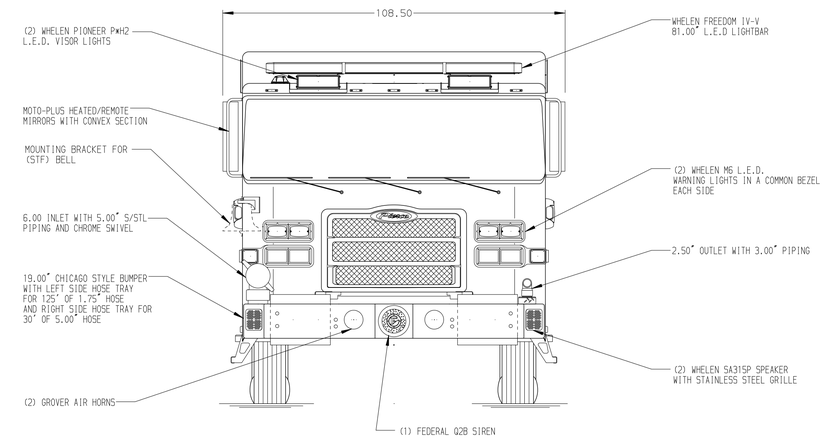

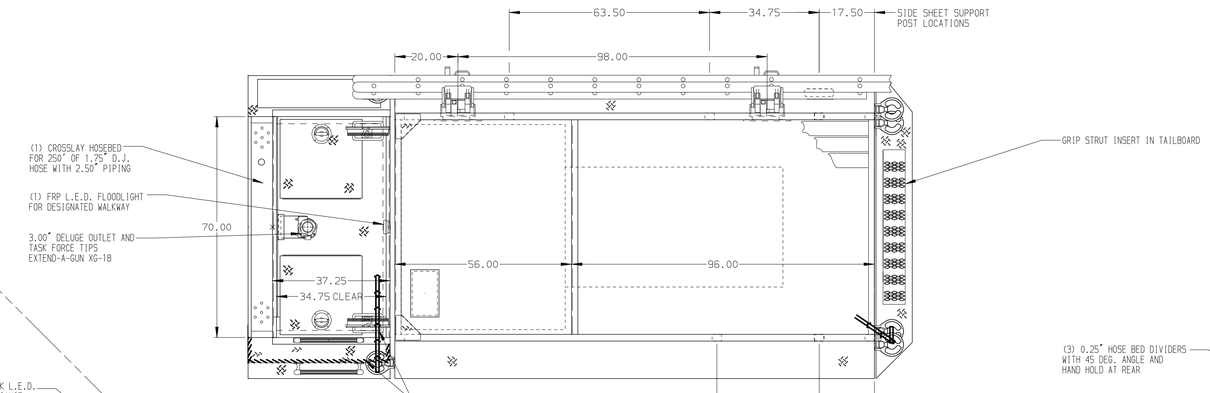

HOSEBED CAPACITIES

1. 800' OF 2.50" D.J. HOSE
2. 300' OF 1.75" D.J. HOSE ABOVE
   300' OF 2.50" D.J. HOSE BELOW
3. 300' OF 1.75" D.J. HOSE ABOVE
   300' OF 2.50" D.J. HOSE BELOW
4. 2000' OF 5.00" D.J. HOSE

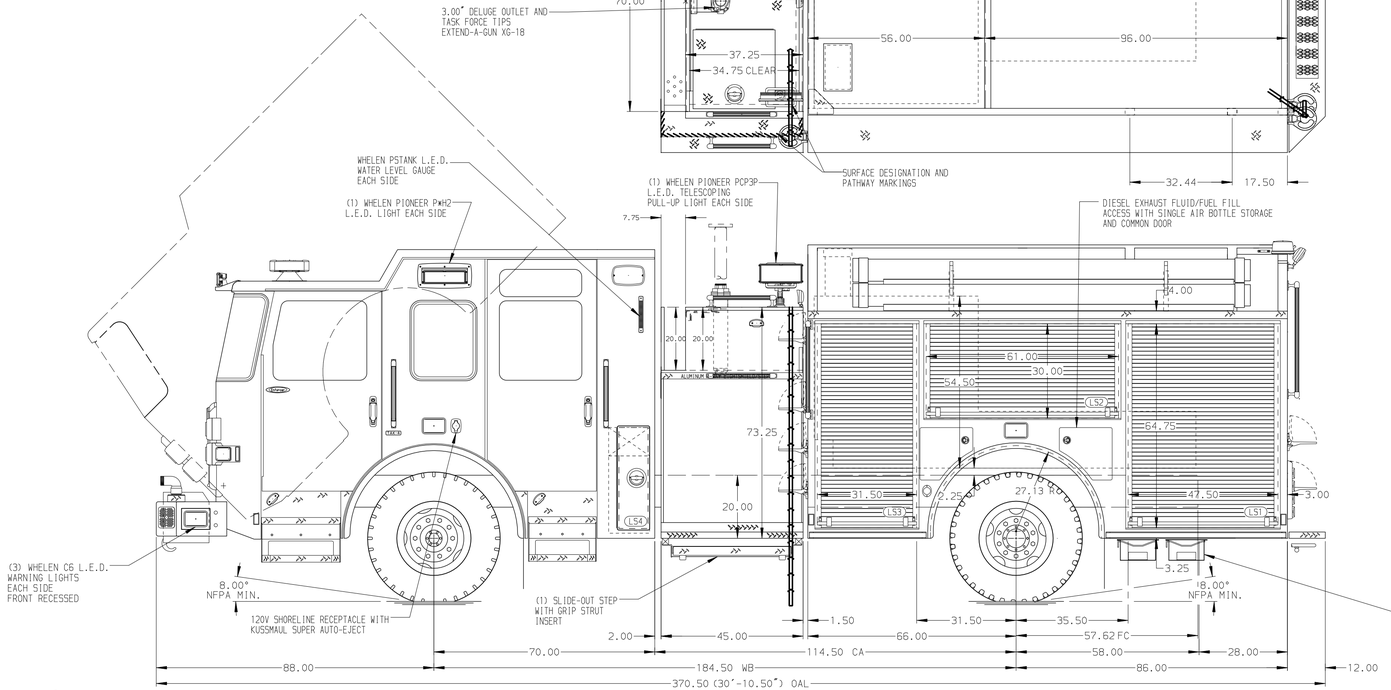

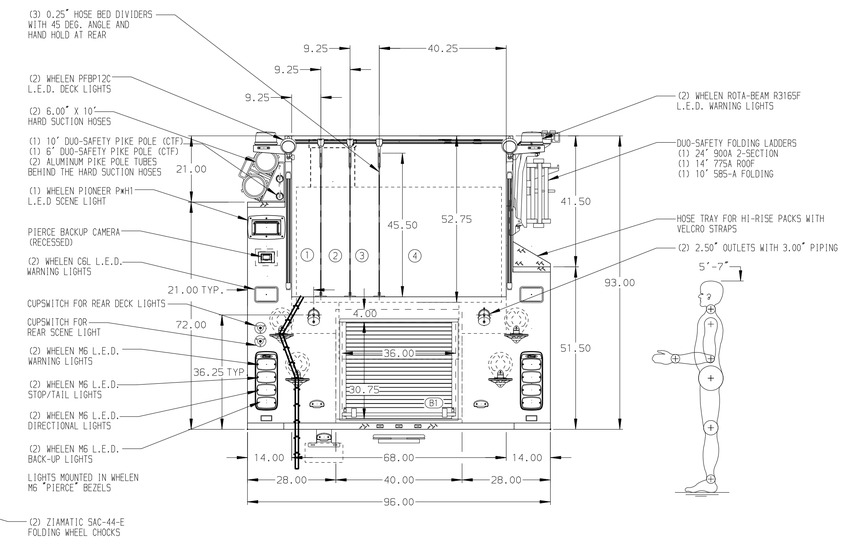

ALUMINUM BODY

MAXIMUM O.A.L. 372.00" | MAXIMUM O.A.W. 110.00" | MAXIMUM O.A.H. 118.50" | SIDE ROLL AND FRONTAL IMPACT PROTECTION

NOTE

DIMENSIONS SHOWN ARE APPROXIMATE AND ARE SUBJECT TO MINOR DEVIATIONS AS MAY OCCUR OR BE NECESSARY IN CONSTRUCTION.
MINOR DETAILS NOT SHOWN.

1. ONSPOT AUTOMATIC TIRE CHAINS TO BE PROVIDED AT REAR
2. AIR INLET/OUTLET WITH DISCONNECT FITTING ON P.S. PUMP PANEL
3. BATTERY CHARGER LOCATED BEHIND DRIVER SEAT
4. BATTERY CHARGER INDICATOR LOCATED ON DRIVER'S SEAT RISER
5. DRIP PAN GUARD FOR ROLL-UP DOOR IN LS1, LS2, LS3, B1, RS1, AND RS3
6. ADJUSTABLE FULL WIDTH/ DEPTH SHELVES TWO IN RS1 AND RS3 AND ONE IN LS1, LS2, LS3, AND B1
7. ONE FLOOR MOUNTED SLIDE-OUT TRAY IN B1
8. ALUMINUM PEGBOARD WITH TRACKS ON THE BACK WALL OF LS1, LS2, LS3, RS1, RS2, AND RS3

REV	DATE	BY	CH
3	22OCT18	LST	CSH
2	02OCT18	LST	CSH
1	31AUG18	LST	AZA

CHASSIS DATA
MAKE: PIERCE
MODEL: ENFORCER

Pierce MANUFACTURING INC.

TITLE: 1750-D-750 GAL POLY,152" BODY (1)XLAY, ZICO LADDER RACK, DELUGE
FOR: LOCUST VALLEY FIRE DEPARTMENT, LOCUST VALLEY, NEW YORK
DWG NO.: 32921AD

JOB NO.	32921
SCALE	1:24
DATE	
DRAWN BY	LST 15AUG18
CHECKED BY	AZA 22AUG18
SHEET SIZE	D
SHEET NO.	1 OF 1

View File Created 22-OCT-2018 07:35:43