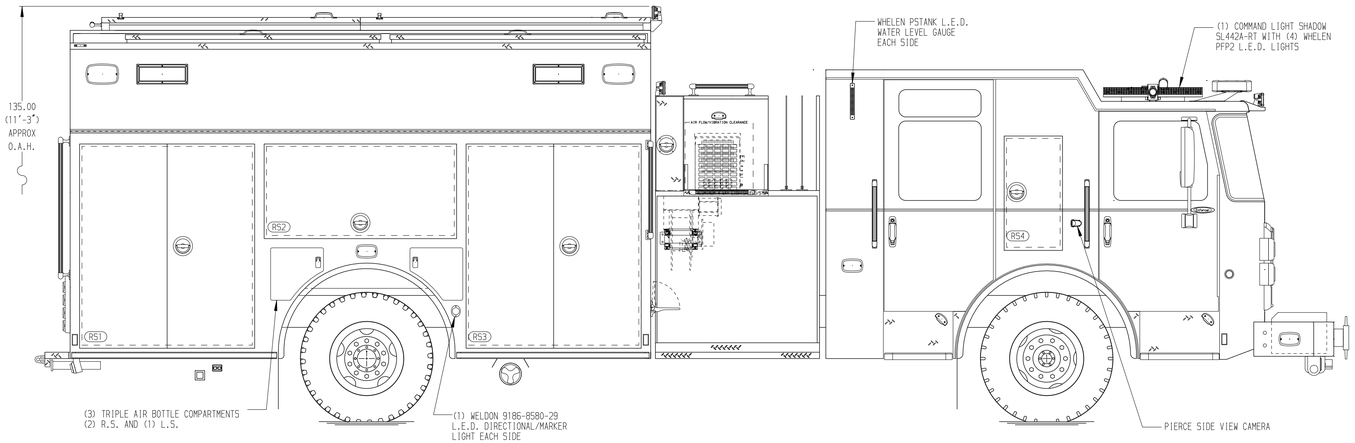

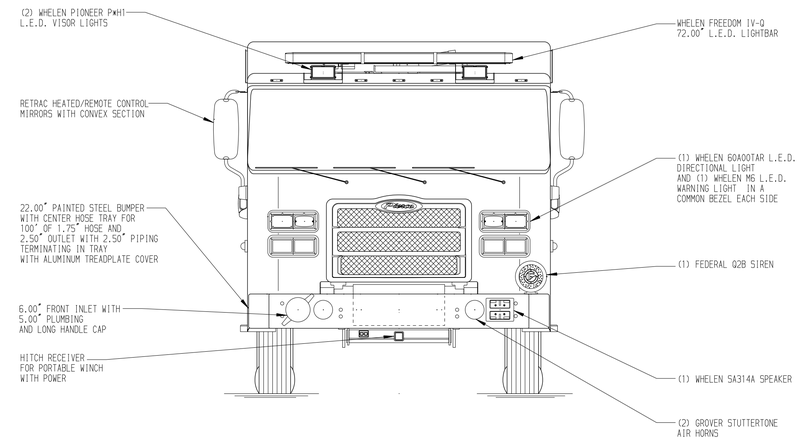

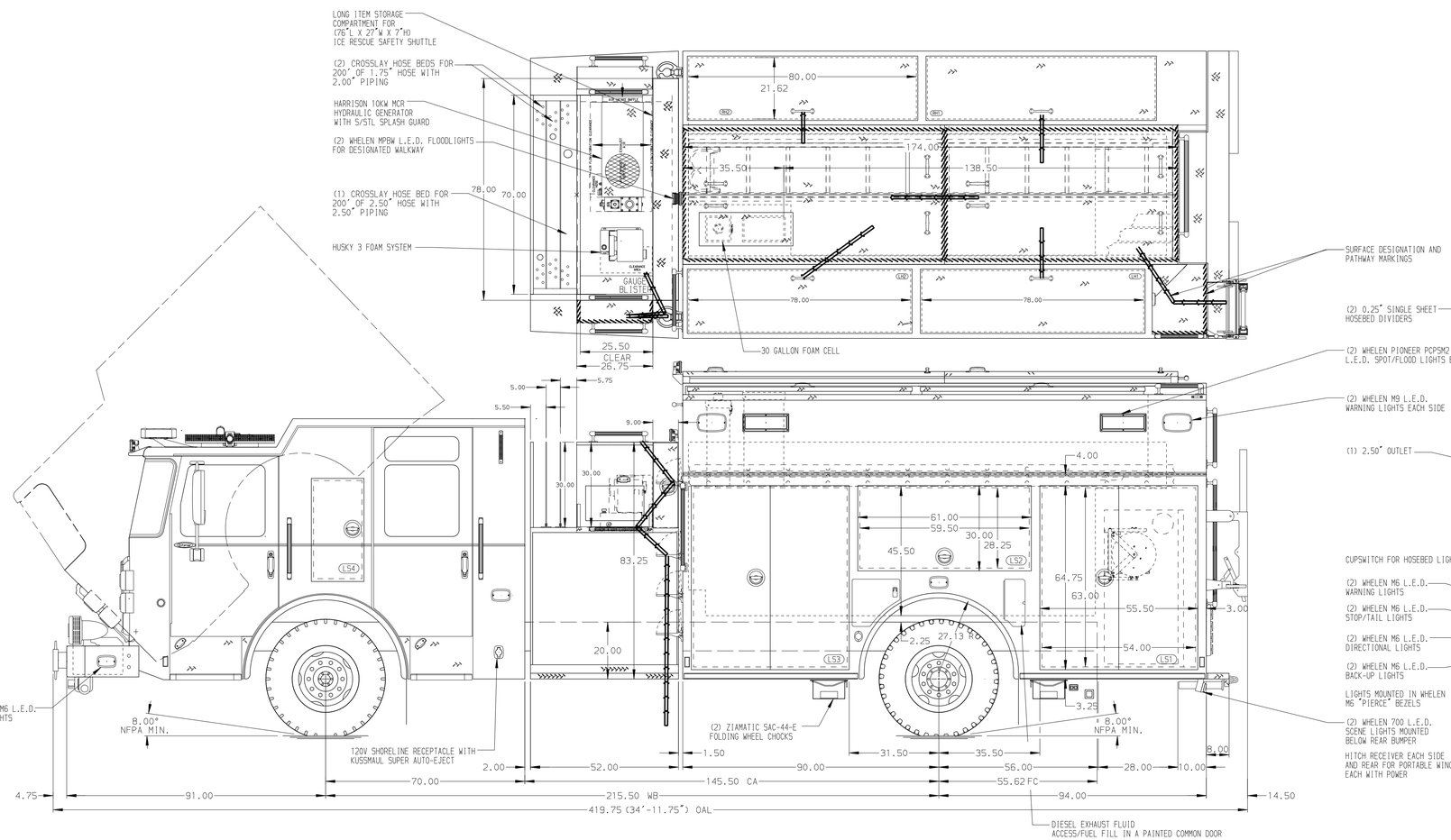

HOSEBED CAPACITIES

1. 250' OF 3.00" D.J. HOSE
2. 200' OF 1.75" D.J. HOSE
3. 1200' OF 5.00" D.J. HOSE

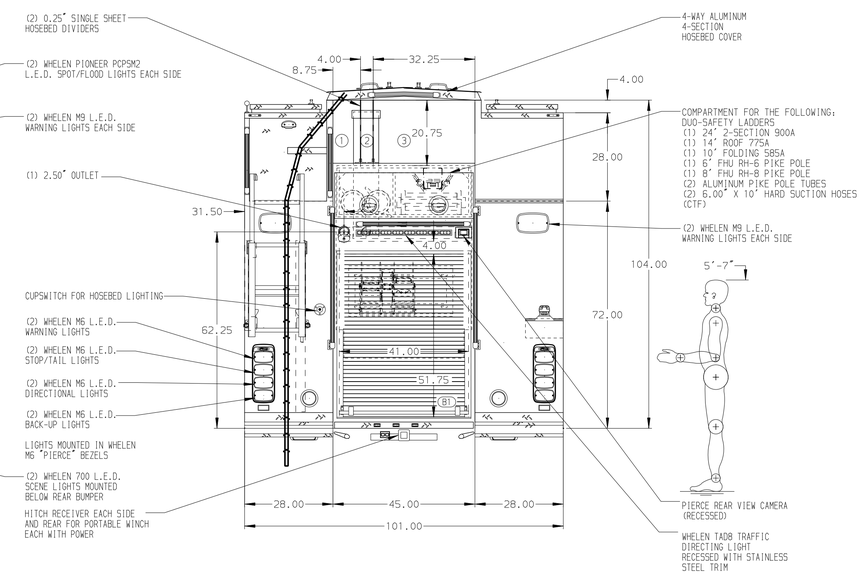

ALUMINUM BODY

SIDE ROLL AND FRONTAL IMPACT PROTECTION

NOTE

DIMENSIONS SHOWN ARE APPROXIMATE AND ARE SUBJECT TO MINOR DEVIATIONS AS MAY OCCUR OR BE NECESSARY IN CONSTRUCTION.
MINOR DETAILS NOT SHOWN.

1. ONSPOT AUTOMATIC TIRE CHAINS TO BE PROVIDED AT REAR
2. RECESSED AIR INLET WITH KUSSMAUL AIR EJECT ON THE D.S. PUMP PANEL
3. BATTERY CHARGER INDICATOR LOCATED ON DRIVER'S SEAT RISER
4. DUAL L.E.D. LIGHT STRIPS LOCATED IN HOSE BED
5. 120V DUPLEX RECEPTACLE IN R.S. AND L.S. EMS COMPARTMENT
6. BATTERY CHARGER LOCATED IN LS3
7. CIRCUIT BREAKER PANEL IN LS4
8. ONE HANNAY ELECTRIC REWIND CORD REEL MODEL ECR6614-23-24 LOCATED IN PS PUMP HOUSE WITH 200' OF 10/3 CABLE WITH CAPTIVE ROLLER ASSEMBLY

REV	DATE	BY	CH
V	07MAR19	LST	DTS
V	20NOV18	LST	DTS
V	18OCT18	LST	DTS
V	23AUG18	LST	AZA

CHASSIS DATA: MAKE PIERCE; MODEL ENFORCER

Pierce MANUFACTURING INC.

TITLE: 2000-D-1000P W/30 GAL FOAM, LADDERS BELOW HOSEBED 184" HDRP BODY, (3)XLAYS, GENERATOR, HUSKY 3, CORD REEL

FOR: SALEM VOLUNTEER FIRE COMPANY
SALEM, CONNECTICUT

DWG NO. 32928AD-SH1

JOB NO.	32928
SCALE	1:24
DATE	
DRAWN BY	LST 13AUG18
CHECKED BY	AZA 15AUG18
SHEET SIZE	D
SHEET NO.	1 OF 1

View File Created 08-MAR-2019 07:19:04