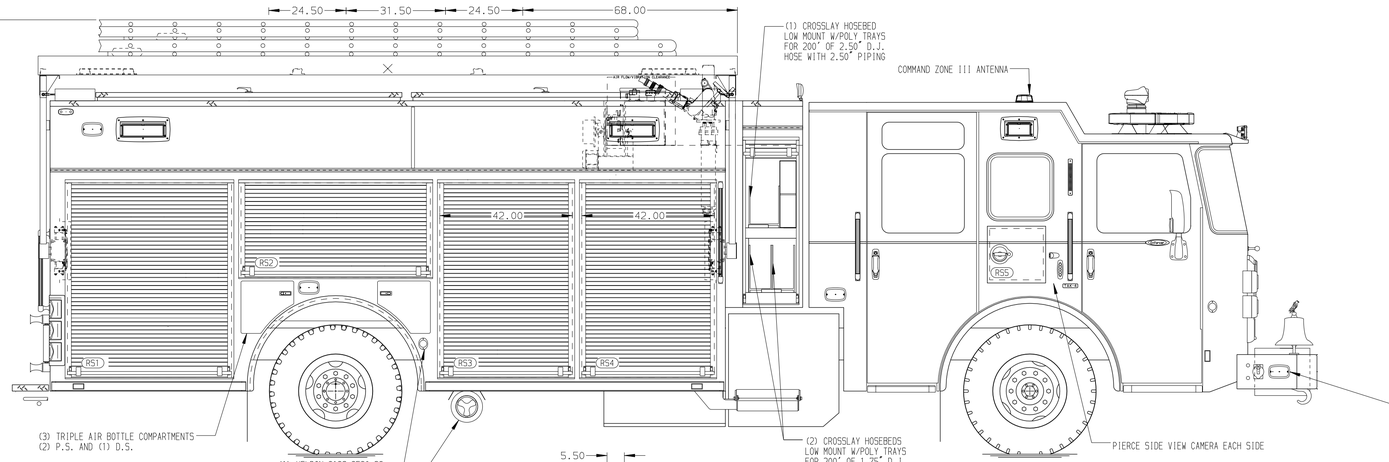

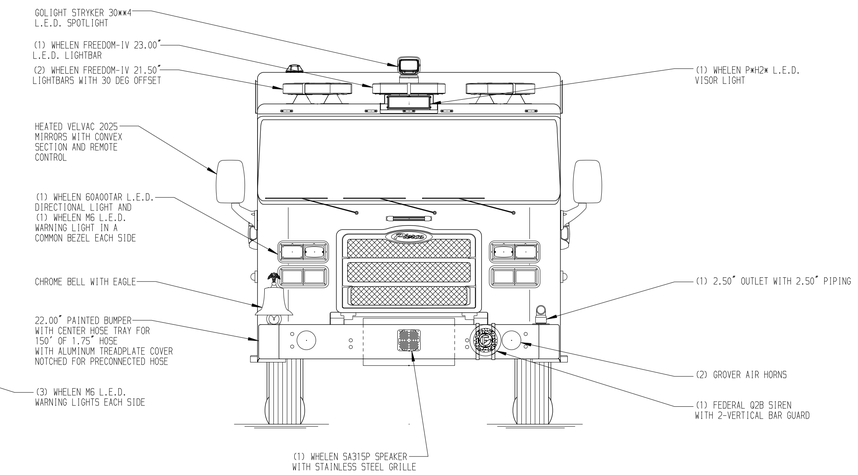

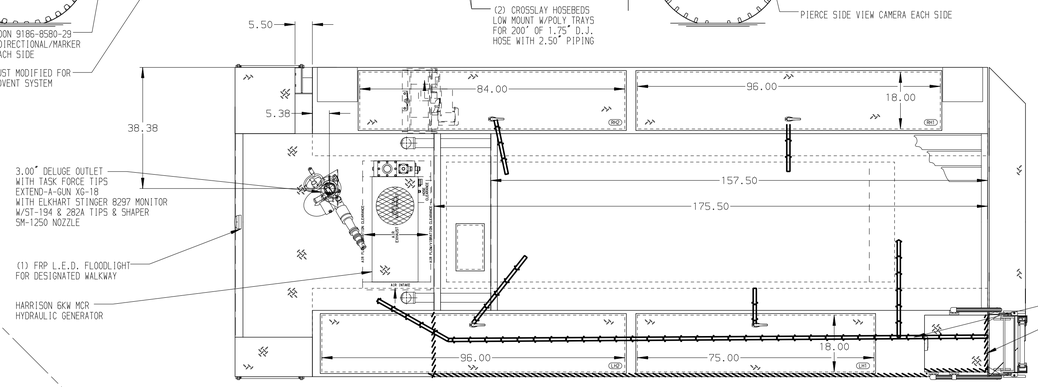

HOSEBED CAPACITIES

1. 200' OF 1.75" HOSE IN A 100' LONG POLY TRAY
2. 200' OF 1.75" HOSE IN A 100' LONG POLY TRAY
3. 900' OF 5.00" HOSE
4. 600' OF 3.00" HOSE
5. 250' OF 2.50" HOSE IN A 100' LONG POLY TRAY

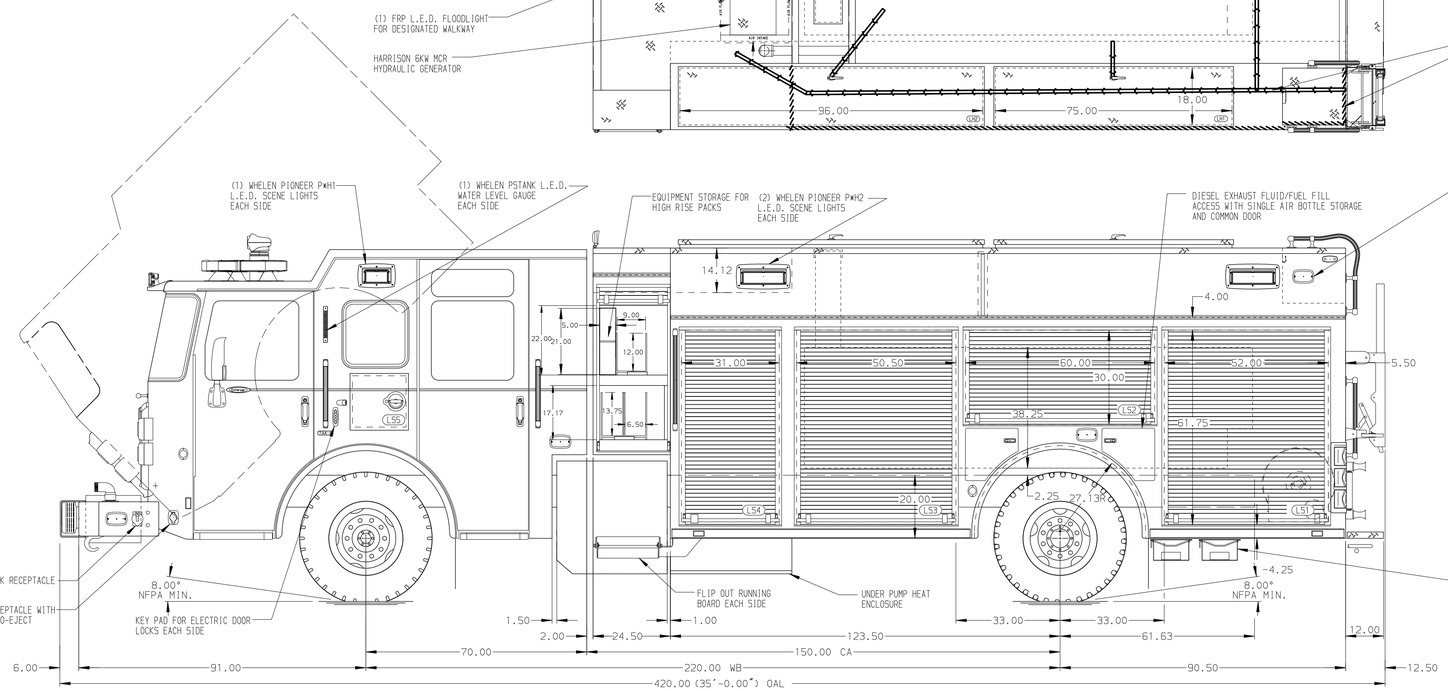

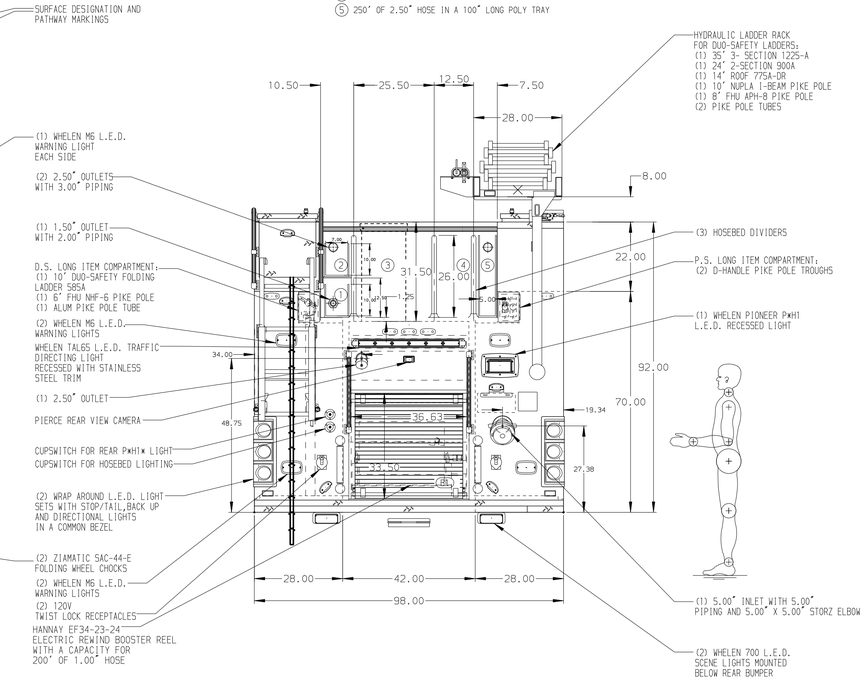

ALUMINUM BODY

FRONTAL IMPACT PROTECTION

NOTE

DIMENSIONS SHOWN ARE APPROXIMATE AND ARE SUBJECT TO MINOR DEVIATIONS AS MAY OCCUR OR BE NECESSARY IN CONSTRUCTION.
MINOR DETAILS NOT SHOWN.

1. ONSPOT AUTOMATIC TIRE CHAINS AT THE REAR
2. AIR INLET WITH DISCONNECT COUPLING ON THE D.S. STEP WELL
3. ANCHOR PLATE FOR NEDERMAN EXHAUST SYSTEM HOSE LOCATION TBD
4. BATTERY CHARGER IN LS3
5. BATTERY CHARGE INDICATOR LOCATED ON DRIVER'S SEAT RISER
6. DUAL L.E.D. LIGHT STRIPS LOCATED IN HOSE BED
7. ADJUSTABLE FULL WIDTH/ DEPTH SHELVES TWO IN RS1, RS3, AND RS4 AND ONE IN LS1 AND LS3
8. ONE ADJUSTABLE SLIDE-OUT TRAY IN LS3
9. ONE FLOOR MOUNTED SLIDE-OUT TRAY IN LS1 AND RS1
10. SLIDE-OUT TOOL BOARD WITH PEGBOARD PATTERN IN RS4
11. ONE SWING-OUT ALUMINUM TOOL BOARD IN RS2
12. CTECH DRAWER ASSEMBLY IN LS3
13. ZICO SCBA HOLDER BRACKET IN RS4
14. CIRCUIT BREAKER PANEL IN LS3
15. ONE HANNAY ELECTRIC REWIND CORD REEL MODEL ECR-6600 WITH 150' OF 12/3 CABLE IN HATCH COMPARTMENT ABOVE RS4
16. 120V NEMA DUPLEX RECEPTACLE TWO IN LS1 AND LS2 AND ONE ON THE OFFICER'S SIDE DASH
17. 120V 7-PLACE RECEPTACLE STRIP IN EACH EMS COMPARTMENT
18. ONE ADJUSTABLE 12" DEEP / FULL WIDTH SHELF IN RS2
19. ONE ADJUSTABLE TILT/SLIDE-OUT TRAY IN LS2
20. ONE HORIZONTAL PARTITION IN RS4
21. PARTITION BETWEEN LS1/B1 AND RS1/B1
22. ONE POLY TRAY SHIPPED LOOSE

REV	DATE	BY	CH
1	21DEC18	LST	PJP
2	14NOV18	LST	PJP

CHASSIS DATA
MAKE: PIERCE
MODEL: ENFORCER

Pierce MANUFACTURING INC.

TITLE: 1500-D-750 GAL POLY, 214" PUC RESCUE
HYDRAULIC LADDER RACK, (3) X-LAYS, DELUGE

FOR: OREM CITY FIRE DEPARTMENT
OREM, UTAH

DWG NO.: 32957AD

JOB NO.	32957
SCALE	1:24
DATE	
DRAWN BY	LST 12SEP18
CHECKED BY	AZA 12SEP18
SHEET SIZE	D
SHEET NO.	1 OF 1

View File Created 21-DEC-2018 09:12:18