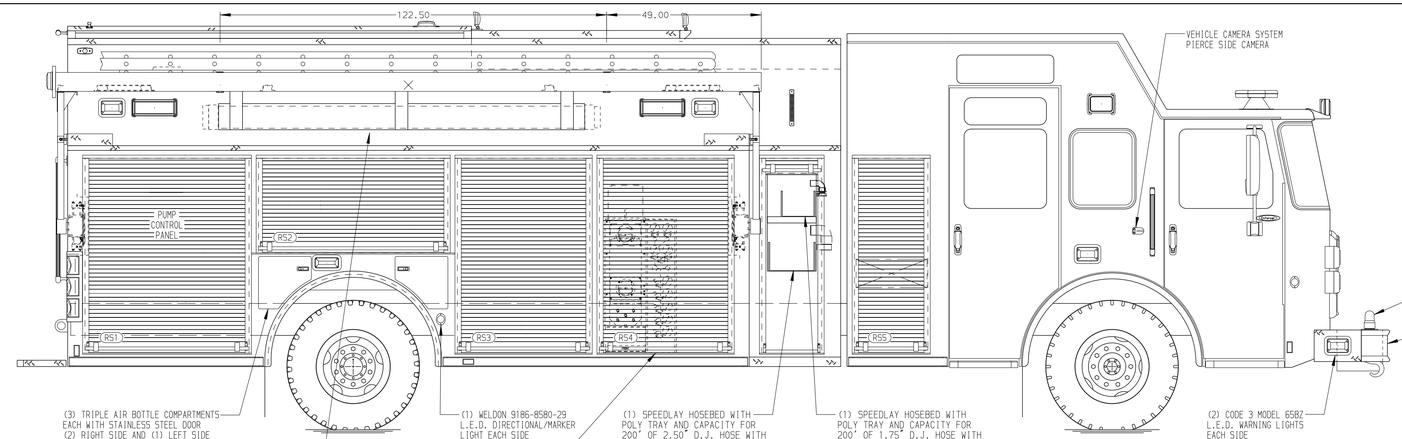


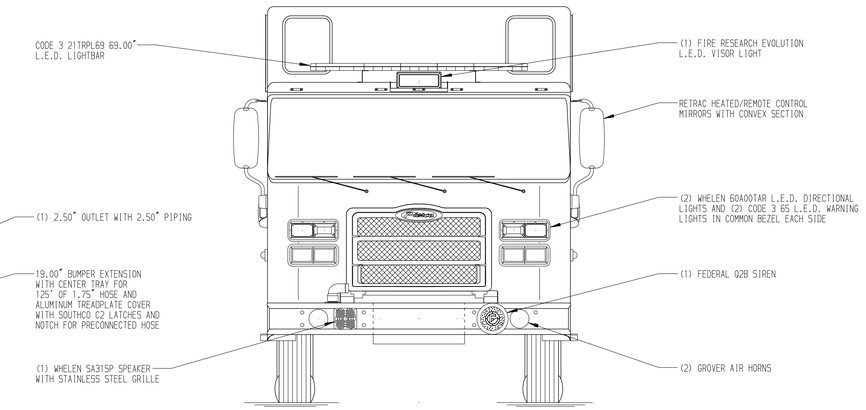


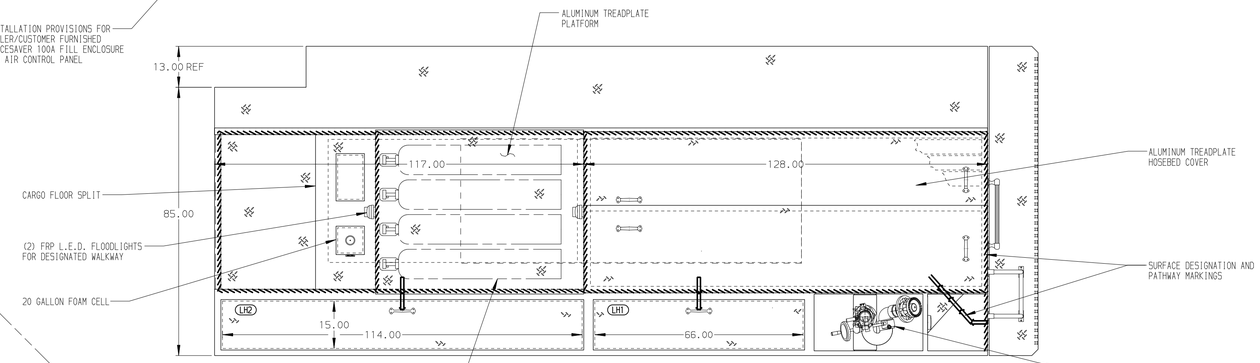


HOSEBED CAPACITIES

1. 250' OF 2.50" D.J.POLY HOSE
2. 250' OF 2.50" D.J.POLY HOSE
3. 350' OF 2.50" D.J.POLY HOSE
4. 700' OF 5.00" D.J.POLY HOSE

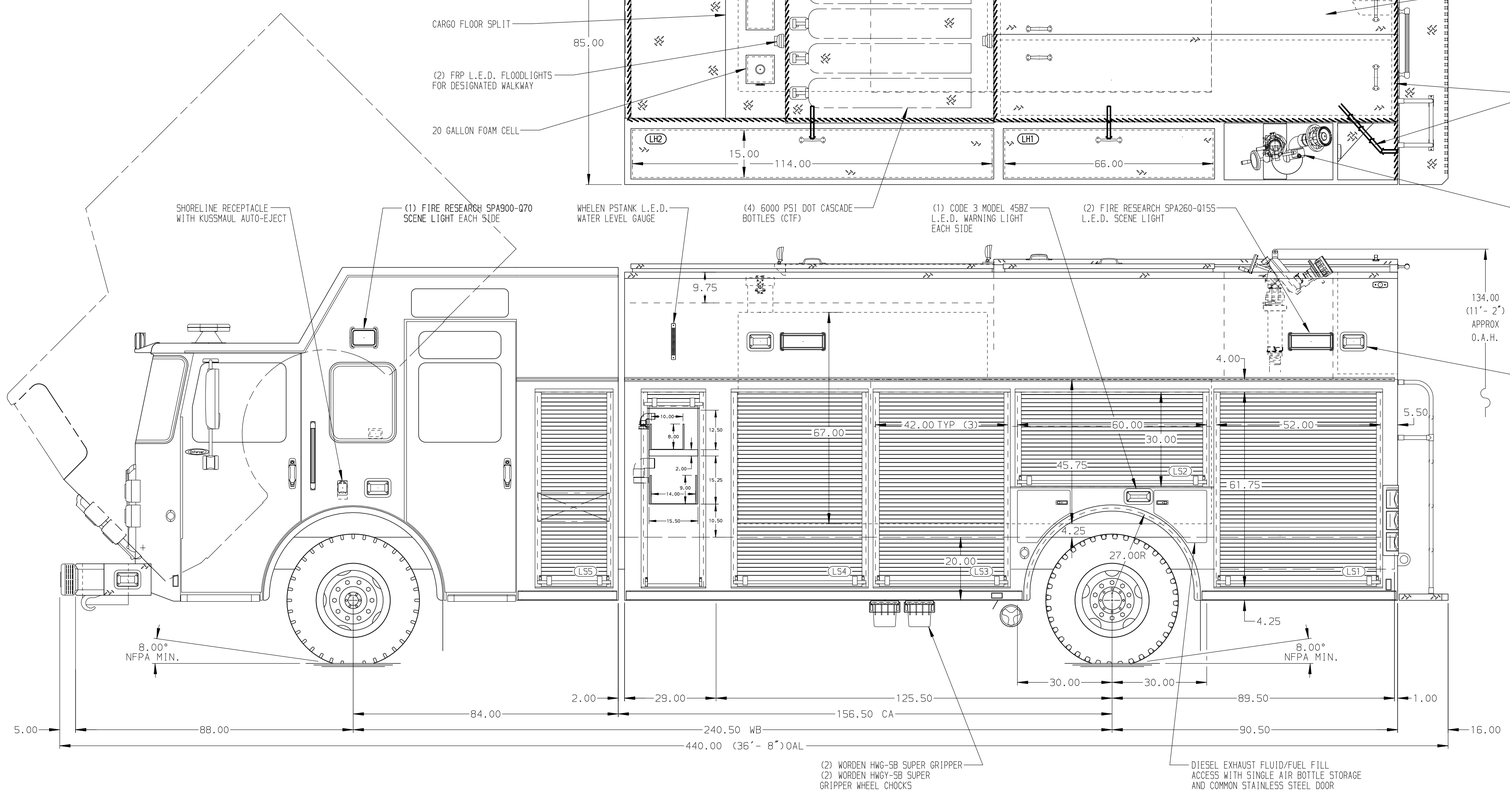


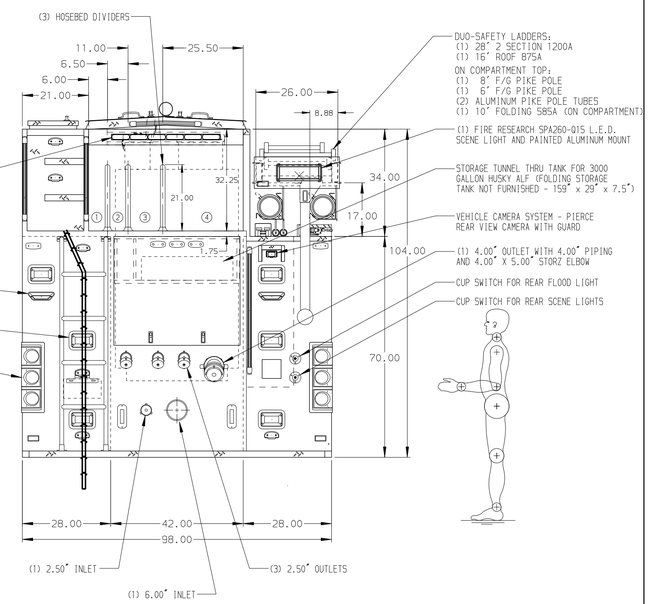


STAINLESS STEEL BODY

MAXIMUM O.A.H. 141.00"

NOTE

DIMENSIONS SHOWN ARE APPROXIMATE AND ARE SUBJECT TO MINOR DEVIATIONS AS MAY OCCUR OR BE NECESSARY IN CONSTRUCTION.
MINOR DETAILS NOT SHOWN.

1. BATTERY CHARGER LOCATED IN COMPARTMENT LS4
2. BATTERY CHARGER INDICATOR BEHIND DRIVER'S SEAT DISPLAYED THROUGH WINDOW
3. DUAL L.E.D. LIGHT STRIPS LOCATED IN HOSE BED
4. SIX FULL WIDTH/DEPTH ADJUSTABLE SHELVES - TWO IN COMPARTMENT LS1, TWO IN LS3 AND TWO IN RS3
5. ONE ADJUSTABLE TILTING SLIDE-OUT TRAY IN COMPARTMENTS LS2 AND RS2
6. ONE FLOOR MOUNTED SLIDE-OUT TRAY WITH 2" SIDES IN COMPARTMENTS LS1, LS3 AND RS3
7. THREE SLIDE-OUT TOOL BOARDS WITH PEGBOARD PATTERN - TWO IN COMPARTMENT LS4 AND ONE IN RS4
8. FOAM PRO 1600 SINGLE AGENT FOAM SYSTEM LOCATED PER SHOP ORDER
9. KUSSMAUL 12V AIR COMPRESSOR IN COMPARTMENT LS4
10. PUMP COMPARTMENT WATER HEATER

| REV | DATE | BY | CH |
|---|---|---|---|
| D | 14MAR19 | JRO | WKL |
| C | 24JAN19 | JRO | EFA |
| B | 26DEC18 | KLE | KWI |
| A | 07NOV18 | JRO | WKL |

CHASSIS DATA — MAKE: PIERCE — MODEL: ENFORCER

**Pierce MANUFACTURING INC.**

TITLE: 1500-D-980 WATER/20 FOAM, 216" BODY, SPEEDLAYS LADDER RACK, HATCH COMPARTMENT, FOAM SYSTEM

FOR: DANE-VIENNA JOINT FIRE DISTRICT, DANE, WISCONSIN

DWG NO.: 33006AD

| JOB NO. | 33006 |
|---|---|
| SCALE | 1:24 |
| DATE | |
| DRAWN BY | JRO |
| | 29OCT18 |
| CHECKED BY | WKL |
| | 29OCT18 |
| SHEET SIZE | D |
| SHEET NO. | 1 OF 1 |

View File Created 14-MAR-2019 08:08:53