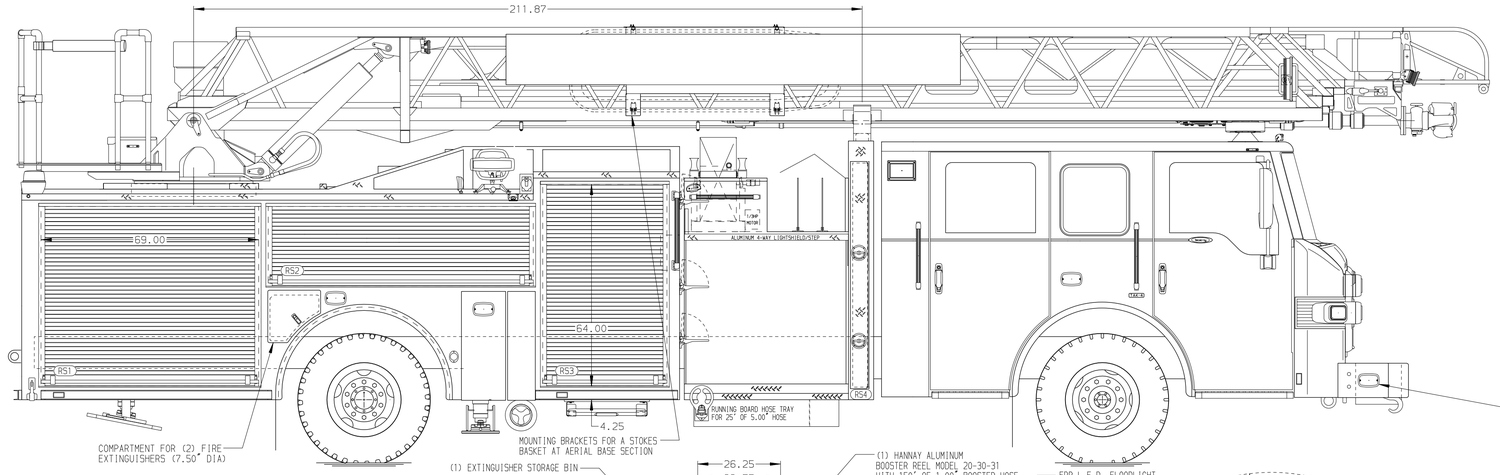

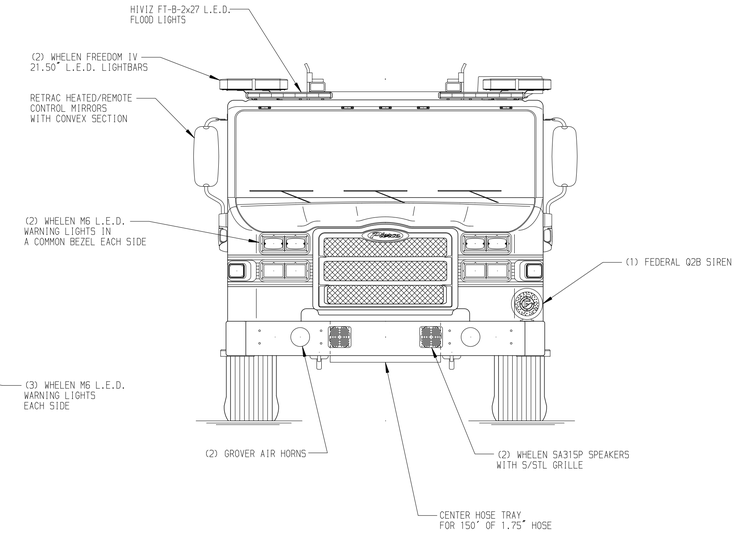

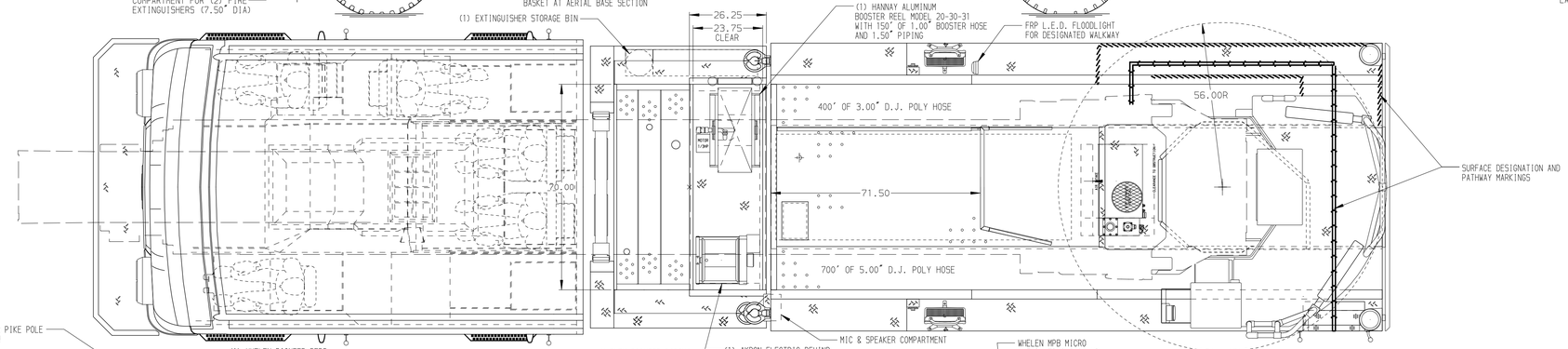

BODY	WATER TANK
107' ASL Aluminum Body	500 Gallon Poly Water Tank
COMPT,LEFT SIDE FRONT	Foam System
Full Height Rollup Forward	Foam System Not Required
COMPT,LEFT SIDE REAR	Foam Cell
Full Height Rollup Rearward	Foam Cell Not Required
COMPT,RIGHT SIDE FRONT	
Full Height Rollup Forward	
COMPT,RIGHT SIDE REAR	
Full Height Rollup Rearward	

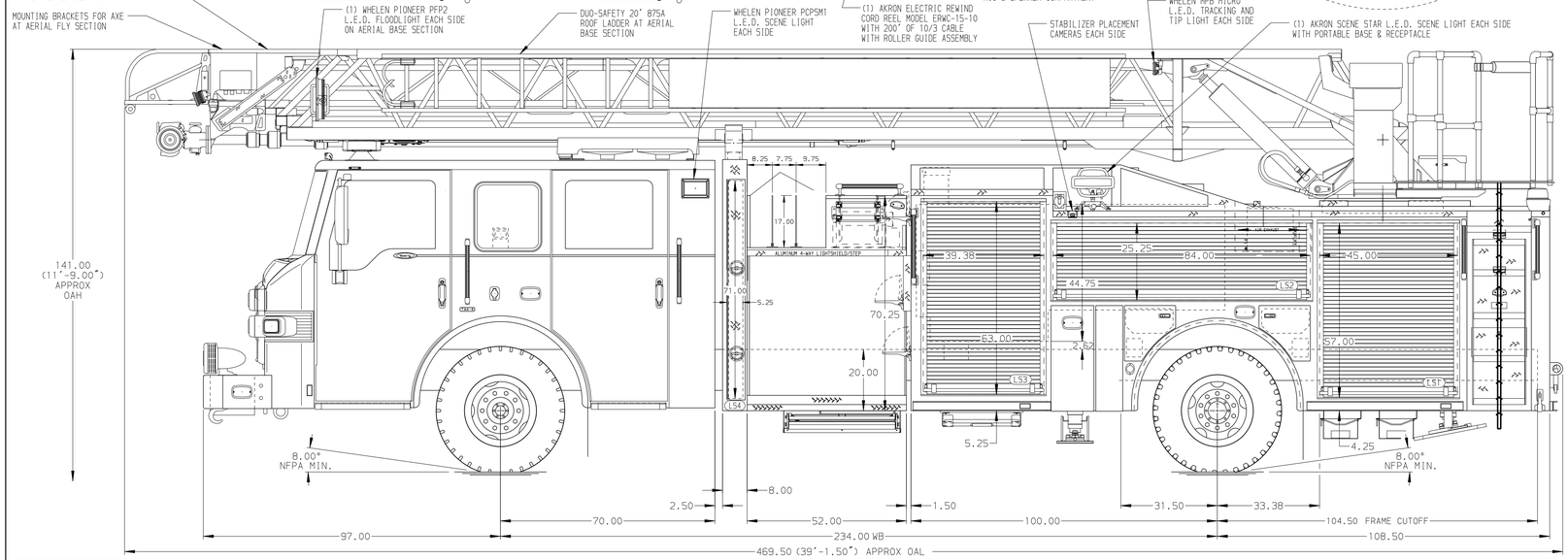

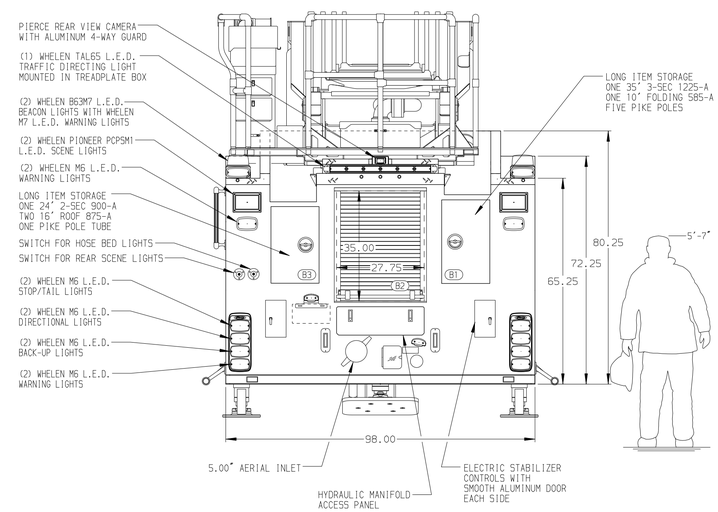

CHASSIS	CAB	AXLE,FRONT,CUSTOM	TRANSMISSION	PUMPHOUSE	CROSSLAYS,1.50"	SPEEDLAYS	SAFETY
Velocity Chassis (Big Block)	7000 Velocity FR Cab	24,000 Lb TAK-4 Axle	ALLison 5th Gen, 4000 EVS P	52" Control Zone Side Mount	(2) 1.50" Standard Capacity	Speedlays Not Required	Side Roll and Frontal Impact Protection
ENGINE	BUMPER	AXLE,REAR		PUMP	CROSSLAYS,2.50"	GENERATOR	
525 HP DD13 Engine	19" Extended Painted Steel	33,500 Lb Meritor Axle		1500 GPM Waterous CSU	(1) 2.50" Standard Capacity	Harrison 6kW MSV Hydraulic	

NOTE

DIMENSIONS SHOWN ARE APPROXIMATE AND ARE SUBJECT TO MINOR DEVIATIONS AS MAY OCCUR OR BE NECESSARY IN CONSTRUCTION.
MINOR DETAILS NOT SHOWN.

1. ONE 1.50 OUTLET WITH 2.00 PIPING AND SWIVEL LOCATED IN CENTER BUMPER TRAY
2. SHORELINE RECEPTACLE WITH KUSSMAUL SUPER AUTO-EJECT LOCATED ON DRIVER SIDE OF THE CAB
3. AIR INLET WITH DISCONNECT COUPLING LOCATED ON THE DRIVER SIDE PUMP PANEL PER SHOP ORDER
4. BATTERY CHARGER LOCATED BEHIND DRIVER'S SEAT
5. BATTERY CHARGE INDICATOR LOCATED IN WINDOW ON DRIVER SIDE OF THE CAB
6. ELEVEN ADJUSTABLE SHELVES IN COMPARTMENTS PER SHOP ORDER
7. ONE SWING-OUT ALUMINUM TOOL BOARD IN COMPARTMENT PER SHOP ORDER
8. ONE CTECH (4) DRAWER ASSEMBLY IN COMPARTMENT PER SHOP ORDER
9. ONE ANGLED ALUMINUM TREADPLATE FOR CRIBBING LOCATED IN COMPARTMENT PER SHOP ORDER
10. ONE SEMI-CIRCULAR HANGER IN COMPARTMENT PER SHOP ORDER
11. THREE VERTICAL PARTITIONS IN COMPARTMENTS PER SHOP ORDER
12. ONE "L" SHAPED PARTITION IN COMPARTMENT PER SHOP ORDER
13. XANTREX POWER INVERTER LOCATED BEHIND OFFICER SEAT PER SHOP ORDER
14. CIRCUIT BREAKER PANEL IN COMPARTMENT PER SHOP ORDER
15. FOUR 120V INTERIOR RECEPTACLES LOCATED PER SHOP ORDER
16. NON-RAISED AERIAL PEDESTAL
17. 1500 GPM HIGH FLOW WATERWAY
18. LIMITED RETRACTION NOT REQUIRED

REV	DATE	BY	CH
2	21FEB19	TKA	KBO
1	10JAN19	TKA	KBO

CHASSIS DATA — MAKE: PIERCE — MODEL: VELOCITY

Pierce MANUFACTURING INC.

TITLE: 107' ASCENDANT AERIAL LADDER AND BODY ASSEMBLY

FOR: GARNER FIRE / RESCUE DEPARTMENT

DWG NO.: 33008AD

JOB NO.	SCALE	DRAWN BY	CHECKED BY	SHEET SIZE	SHEET NO.
33008	1:24	TKA	GRM	D	1 OF 1

DATE: 13NOV18 (DRAWN BY) — 13NOV18 (CHECKED BY)

View File Created 04-MAR-2019 08:30:14