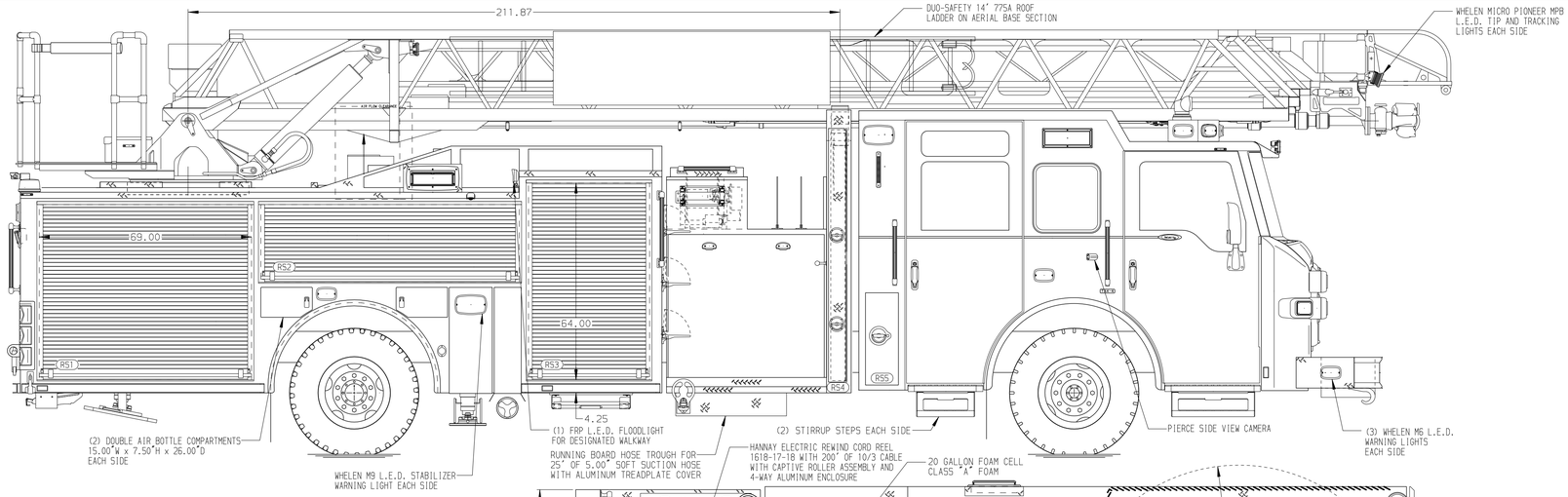

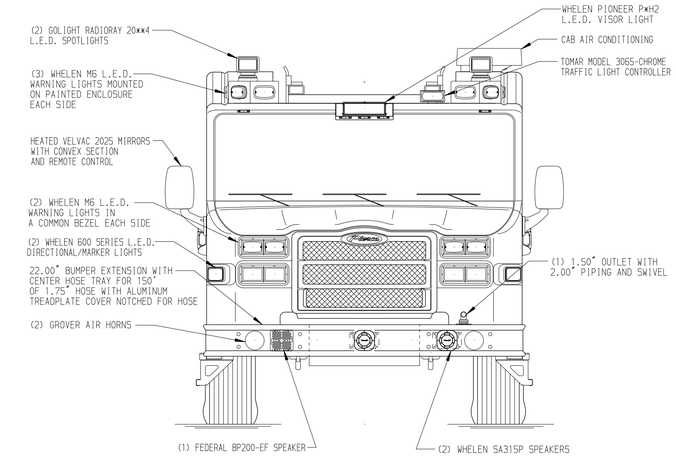

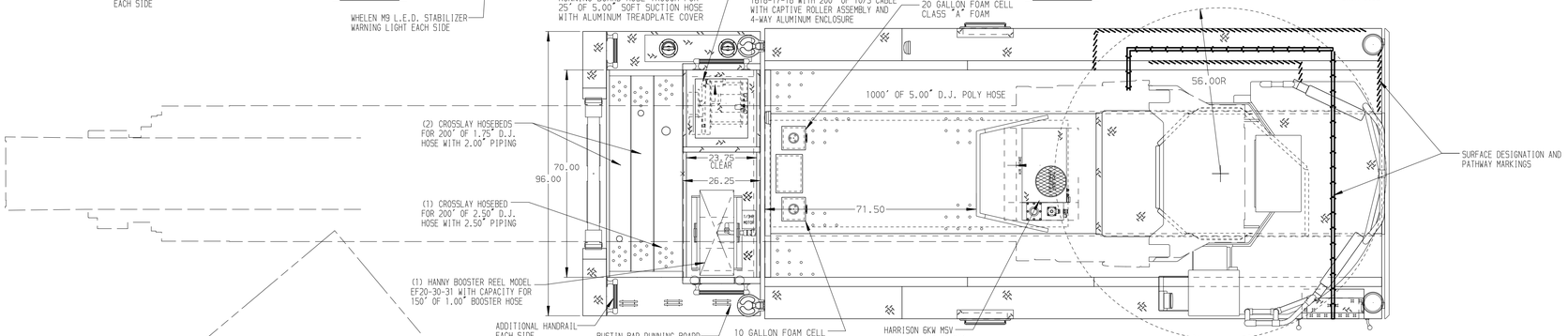

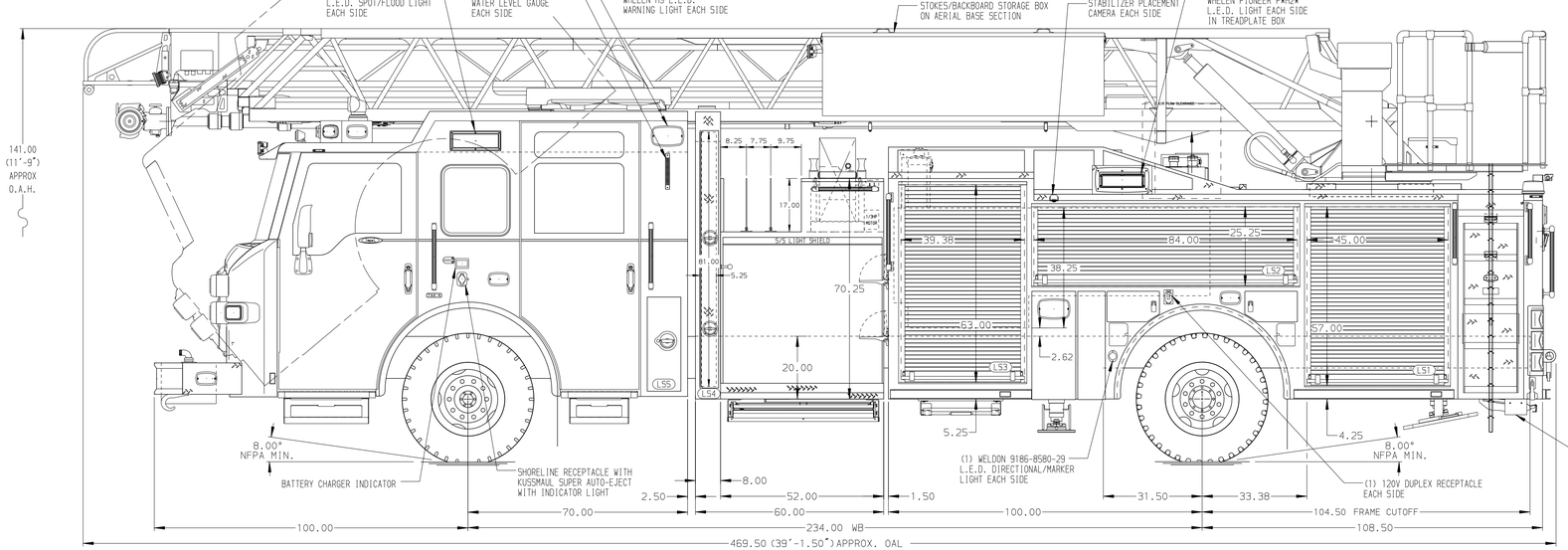

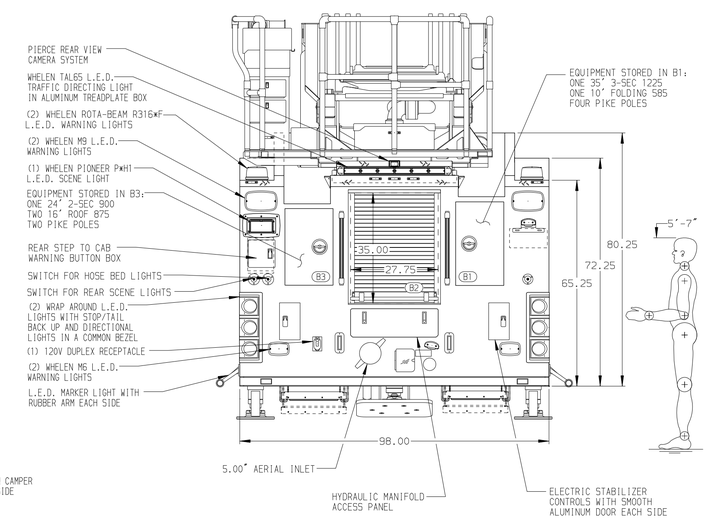

ALUMINUM BODY

SIDE ROLL AND FRONTAL IMPACT PROTECTION

NOTE

DIMENSIONS SHOWN ARE APPROXIMATE AND ARE SUBJECT TO MINOR DEVIATIONS AS MAY OCCUR OR BE NECESSARY IN CONSTRUCTION.
MINOR DETAILS NOT SHOWN.

1. BATTERY CHARGER LOCATED IN COMPARTMENT LS3
2. DUAL L.E.D. LIGHT STRIPS LOCATED IN HOSE BED
3. ONE ADJUSTABLE FULL WIDTH/FULL DEPTH SHELF IN COMPARTMENTS LS3,RS3;TWO IN LS1,RS1,B2
4. ONE FLOOR MOUNTED SLIDE-OUT TRAY IN COMPARTMENT RS1
5. CIRCUIT BREAKER PANEL IN COMPARTMENT LS3
6. TRIDENT FOLDING STEPS ON AERIAL DEVICE
7. REMOTE LADDER CONTROLS AT AERIAL TIP
8. L.E.D. LIGHTING ON AERIAL LADDER SECTIONS
9. 120V POWER TO AERIAL TIP
10. 2-WAY INTERCOM SYSTEM BETWEEN AERIAL TIP AND TURNTABLE
11. LIFTING EYE ROPE RESCUE ATTACHMENT AT AERIAL TIP
12. 1500 GPM HIGH FLOW WATERWAY
13. ONE SPLIT SWING-OUT TOOLBOARD IN COMPARTMENT RS2
14. AIR INLET WITH DISCONNECT COUPLING LOCATED ON D.S. PUMP PANEL
15. AIR OUTLET WITH SHUT-OFF VALVE LOCATED ON D.S. PUMP PANEL
16. PAC TRAC INSTALLED ON SLIDE-OUT TRAY IN COMPARTMENT RS1
17. NO LIMITED RETRACTION

REV	DATE	BY	CH
D	03JAN19	LWE	JJR
C	14DEC18	LWE	JJR
B	13NOV18	LWE	JJR
A	10OCT18	SHU	JBL

CHASSIS DATA
MAKE: PIERCE
MODEL: IMPEL

Pierce MANUFACTURING INC.

TITLE: 107' ASCENDANT AERIAL LADDER AND BODY ASSEMBLY
400 GALLON TANK - 370 WATER/20 FOAM/10 FOAM

FOR: CITY OF TUCSON
TUCSON, AZ

DWG NO.: 33062AD

JOB NO.	33062 01-02
SCALE	1:24
DATE	
DRAWN BY	SHU
26SEP18	
CHECKED BY	JBL
01OCT18	
SHEET SIZE	D
SHEET NO.	1 OF 1

View File Created 03-JAN-2019 14:15:53