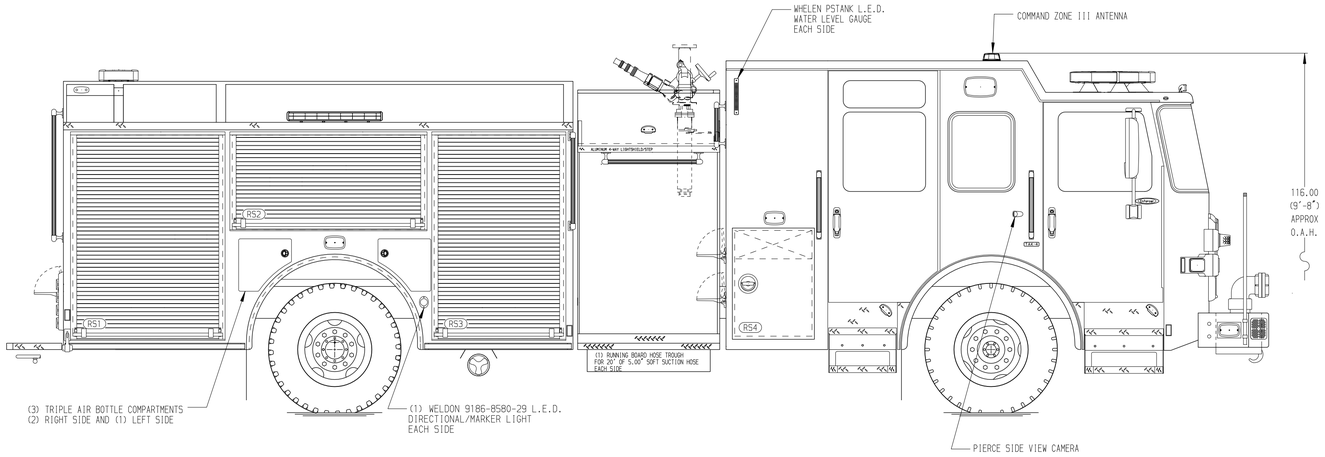

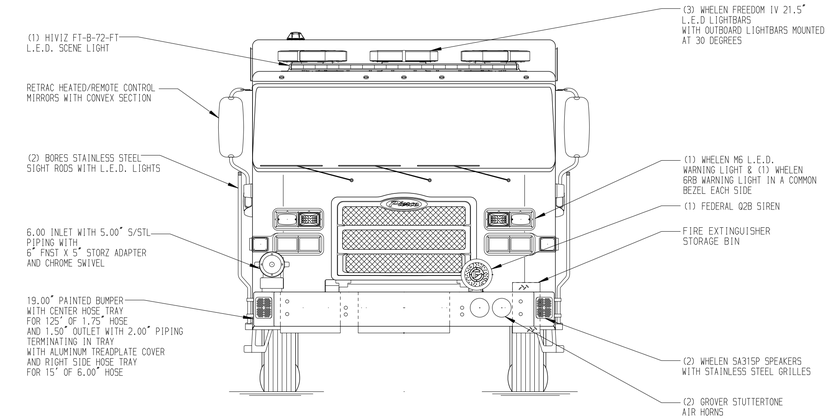

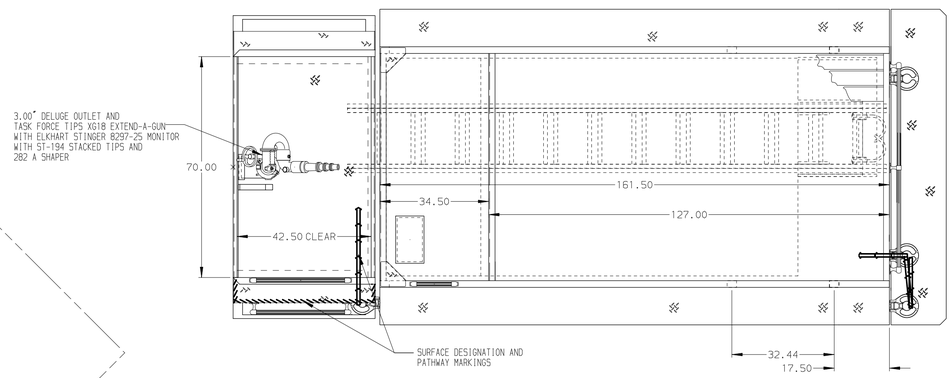

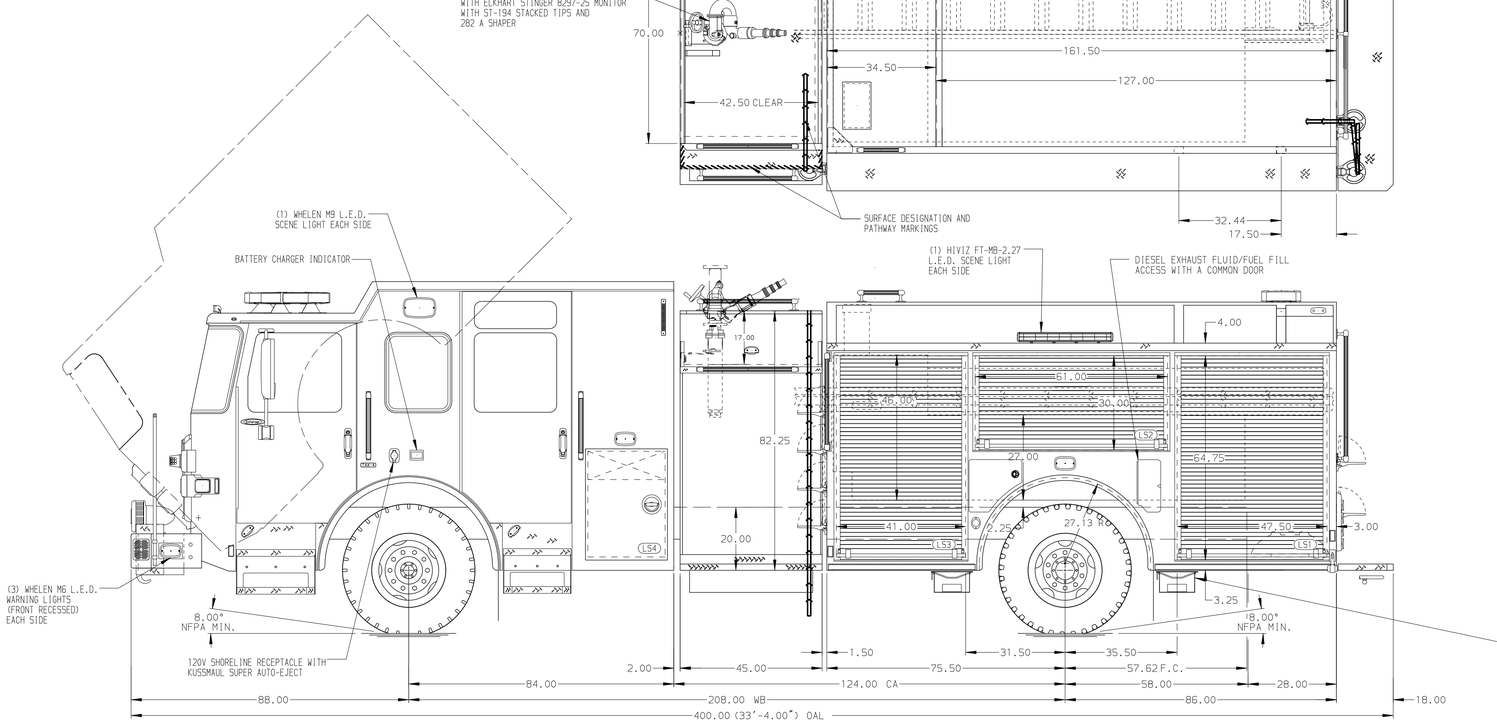

HOSEBED CAPACITIES

1. 300' OF 1.75" D.J. POLY HOSE ON TOP OF 200' OF 2.50" D.J. POLY HOSE
2. 300' OF 1.75" D.J. POLY HOSE ON TOP OF 200' OF 2.50" D.J. POLY HOSE
3. 800' OF 5.00" D.J. POLY HOSE
4. 500' OF 2.50" D.J. POLY HOSE
5. 800' OF 3.00" D.J. POLY HOSE

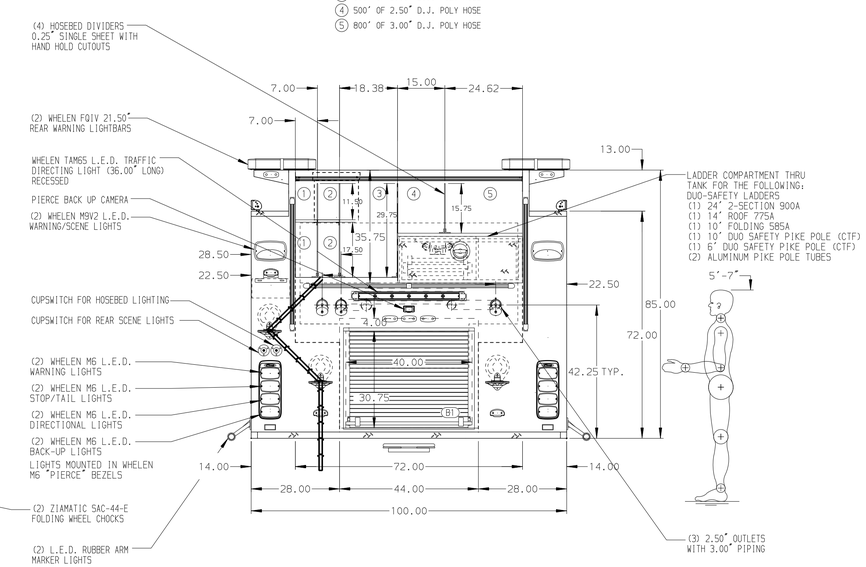

ALUMINUM BODY

SIDE ROLL AND FRONTAL IMPACT PROTECTION

NOTE

DIMENSIONS SHOWN ARE APPROXIMATE AND ARE SUBJECT TO MINOR DEVIATIONS AS MAY OCCUR OR BE NECESSARY IN CONSTRUCTION.
MINOR DETAILS NOT SHOWN.

1. ONSPOT AUTOMATIC TIRE CHAINS TO BE PROVIDED AT REAR
2. AIR INLET WITH DISCONNECT COUPLING ON D.S. PUMP PANEL
3. BATTERY CHARGER IN CAB BEHIND THE DRIVER'S SEAT
4. DUAL L.E.D. LIGHT STRIPS LOCATED IN HOSE BED
5. DRIP PAN GUARD FOR ROLL-UP DOOR IN LS1, LS2, LS3, B1, RS1, RS2, AND RS3
6. ADJUSTABLE FULL WIDTH/ DEPTH SHELF IN LS1, LS3, RS1, AND RS3
7. ONE FLOOR MOUNTED SLIDE-OUT TRAY IN LS3 AND RS3
8. ONE ADJUSTABLE SLIDE OUT TRAY IN LS1 AND RS1
9. STOKES BASKET STORAGE THRU LS1/RS1 AND B1 COMPARTMENTS

REV	DATE	BY	CH
7	09NOV18	LST	DTS
6	19OCT18	LST	DTS

CHASSIS DATA
MAKE: PIERCE
MODEL: ENFORCER

Pierce MANUFACTURING INC.

TITLE: 2000-D-750 GAL POLY, 161" FH FDLER LADDERS THRU TANK, DELUGE
FOR: COMMACK FIRE DEPARTMENT COMMACK, NEW YORK
DWG NO.: 33069AD

JOB NO.	33069
SCALE	1:24
DATE	
DRAWN BY	LST 12SEP18
CHECKED BY	AZA 21SEP18
SHEET SIZE	D
SHEET NO.	1 OF 1

View File Created 12-NOV-2018 08:55:38