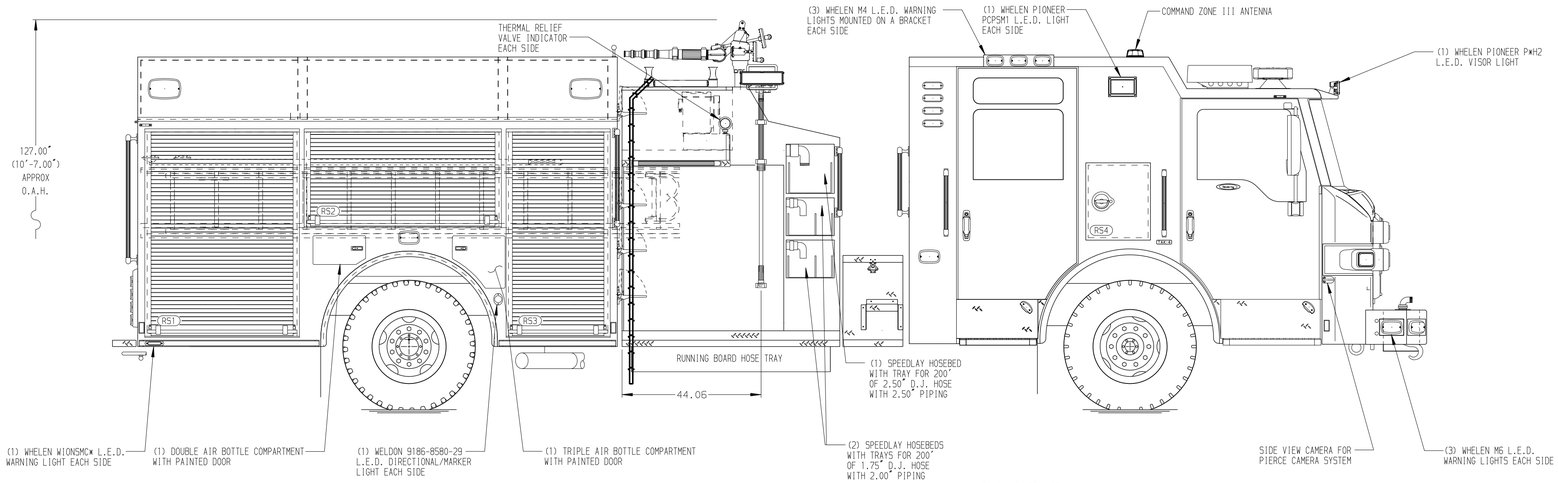

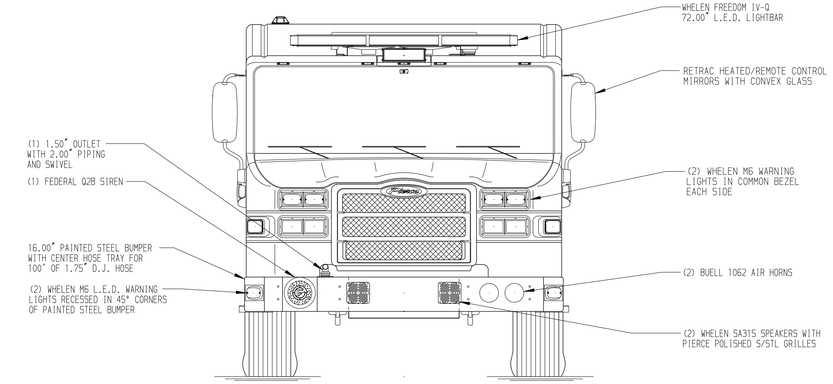

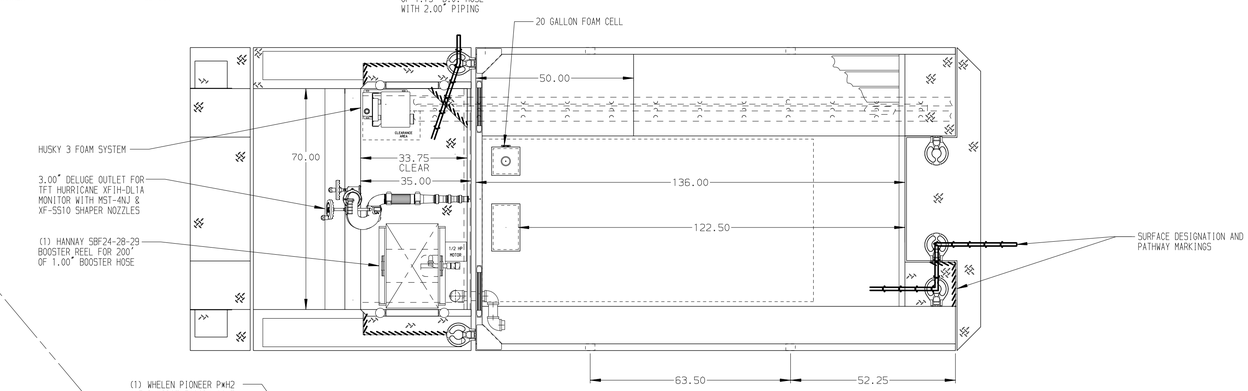

HOSEBED CAPACITIES

1. - 300' OF 2.50" D.J. HOSE
2. -1000' OF 5.00" D.J. HOSE
3. - 150' OF 3.00" D.J. HOSE
4. - 150' OF 3.00" D.J. HOSE

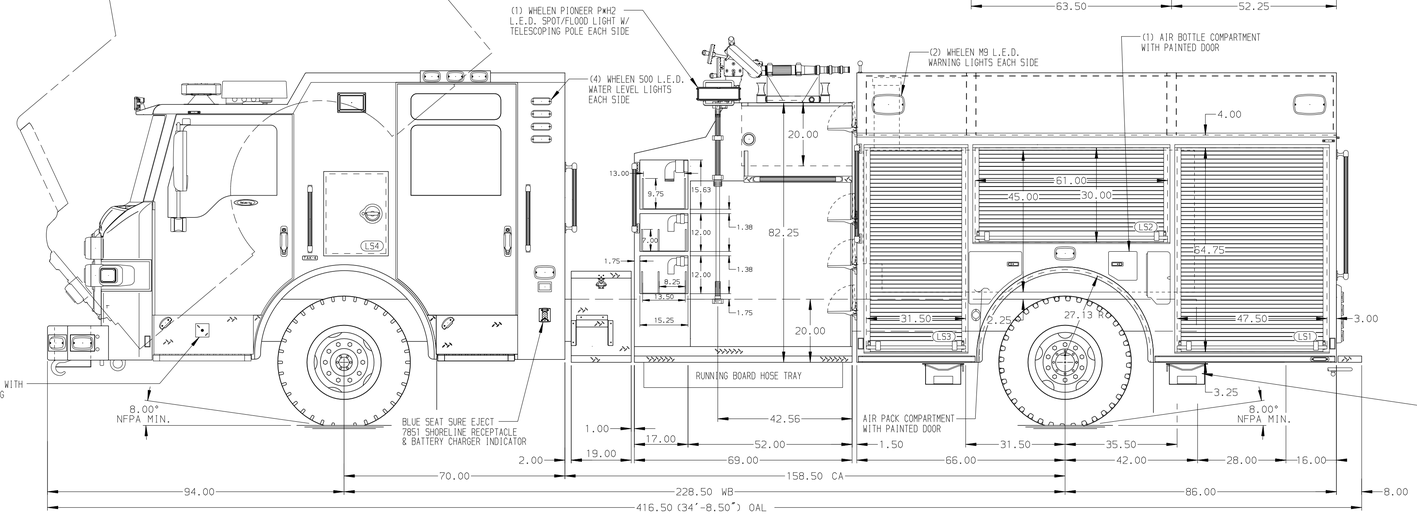

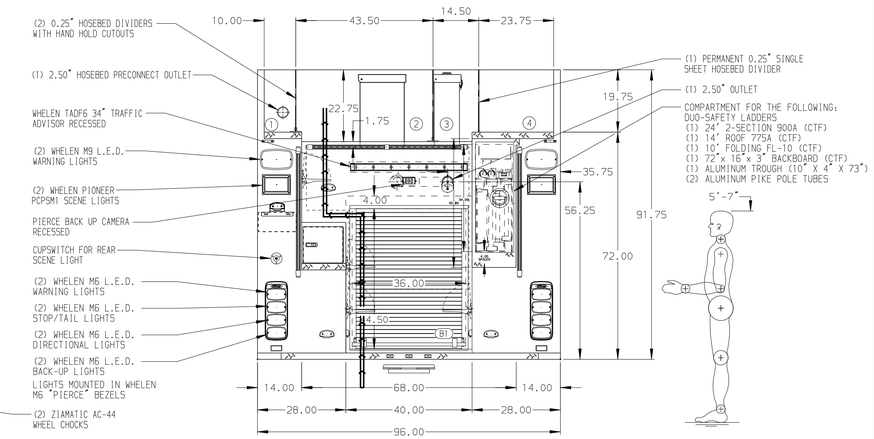

ALUMINUM BODY

SIDE ROLL AND FRONTAL IMPACT PROTECTION

NOTE

DIMENSIONS SHOWN ARE APPROXIMATE AND ARE SUBJECT TO MINOR DEVIATIONS AS MAY OCCUR OR BE NECESSARY IN CONSTRUCTION.
MINOR DETAILS NOT SHOWN.

1. BATTERY CHARGER LOCATED UNDER CENTER FORWARD FACING CREW CAB SEAT
2. ONE ADJUSTABLE FULL WIDTH/DEPTH SHELF IN COMPARTMENT LS1, LS2, TWO IN RS1, THREE IN RS3
3. ONE FULL WIDTH ADJUSTABLE SLIDE-OUT TRAY IN COMPARTMENTS B1
4. ONE FULL WIDTH TILT/SLIDE-OUT TRAY LOCATED IN COMPARTMENT LS1
5. ONE FLOOR MOUNTED SLIDE-OUT TRAY IN COMPARTMENTS LS3, RS1, RS3, AND B1
6. SWING-OUT TOOL BOARD WITH PEGBOARD PATTERN IN COMPARTMENT RS2
7. ONE CTECH DRAWER ASSEMBLY IN COMPARTMENT LS3
8. ONE HORIZONTAL PARTITION IN COMPARTMENT LS3
9. HERCULES 200 CFM COMPRESSED AIR FOAM SYSTEM
10. TWO 20A /120V RECEPTACLES IN DS EMS COMPARTMENT & COMPARTMENT LS3

REV	DATE	BY	CH
V	25FEB19	AMI	CHR
V	14FEB19	AMI	KWI
V	07FEB19	AMI	CHR
V	27DEC18	KLE	KWI
V	08NOV18	AMI	CCA

CHASSIS DATA
MAKE: PIERCE
MODEL: VELOCITY

Pierce MANUFACTURING INC.

TITLE: 2000-D-750G WATER, 20G FOAM, 152" RESCUE / FDLER (2) SPEEDLAYS, DELUGE, CAFS 200, HUSKY 3, A/C
FOR: BEXAR BULVERDE VOLUNTEER FIRE DEPARTMENT SAN ANTONIO, TEXAS
DWG NO.: 33188AD

JOB NO.	33188
SCALE	1:24
DRAWN BY	AMI
DATE	290CT18
CHECKED BY	CCA
DATE	290CT18
SHEET SIZE	D
SHEET NO.	1 OF 1

View File Created 01-MAR-2019 07:42:18