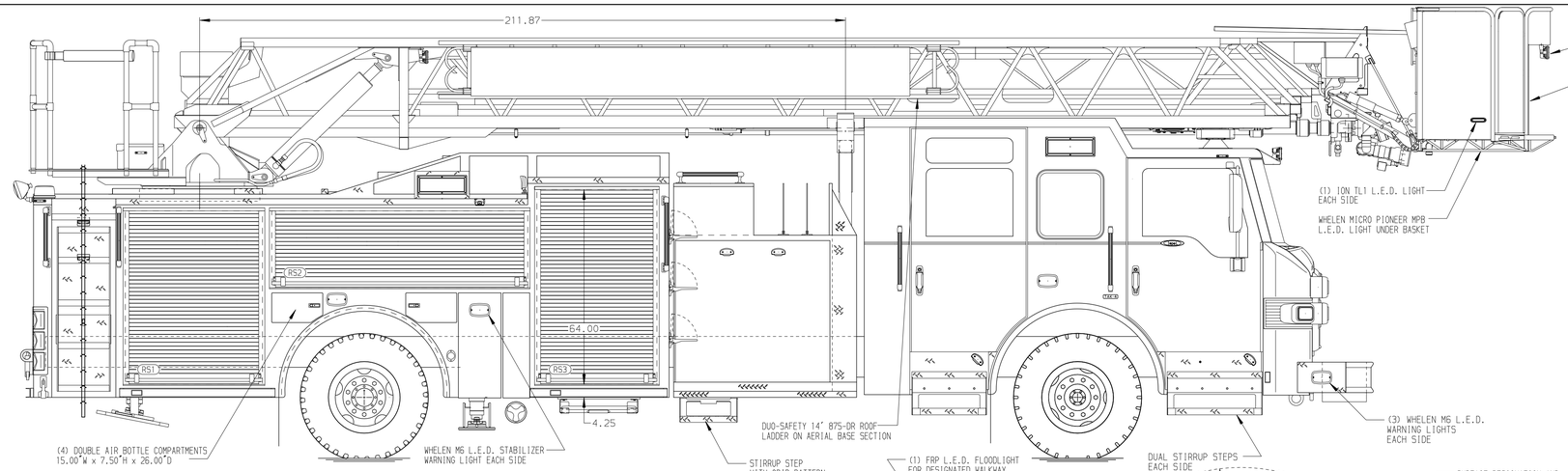

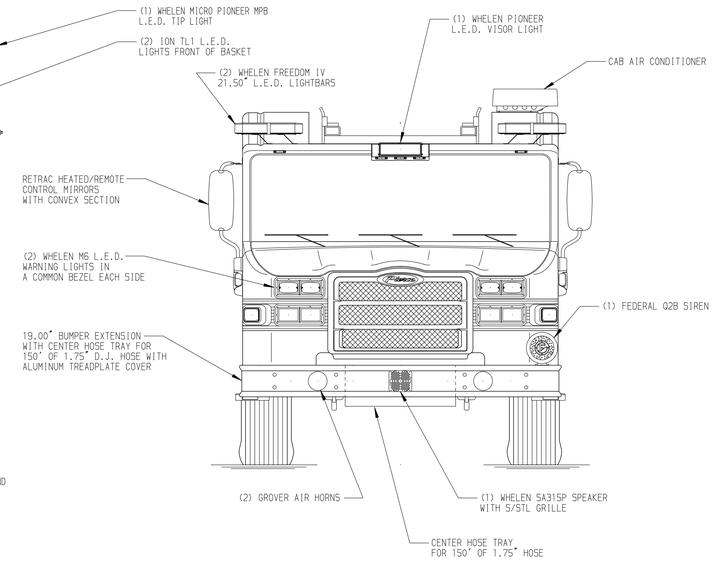

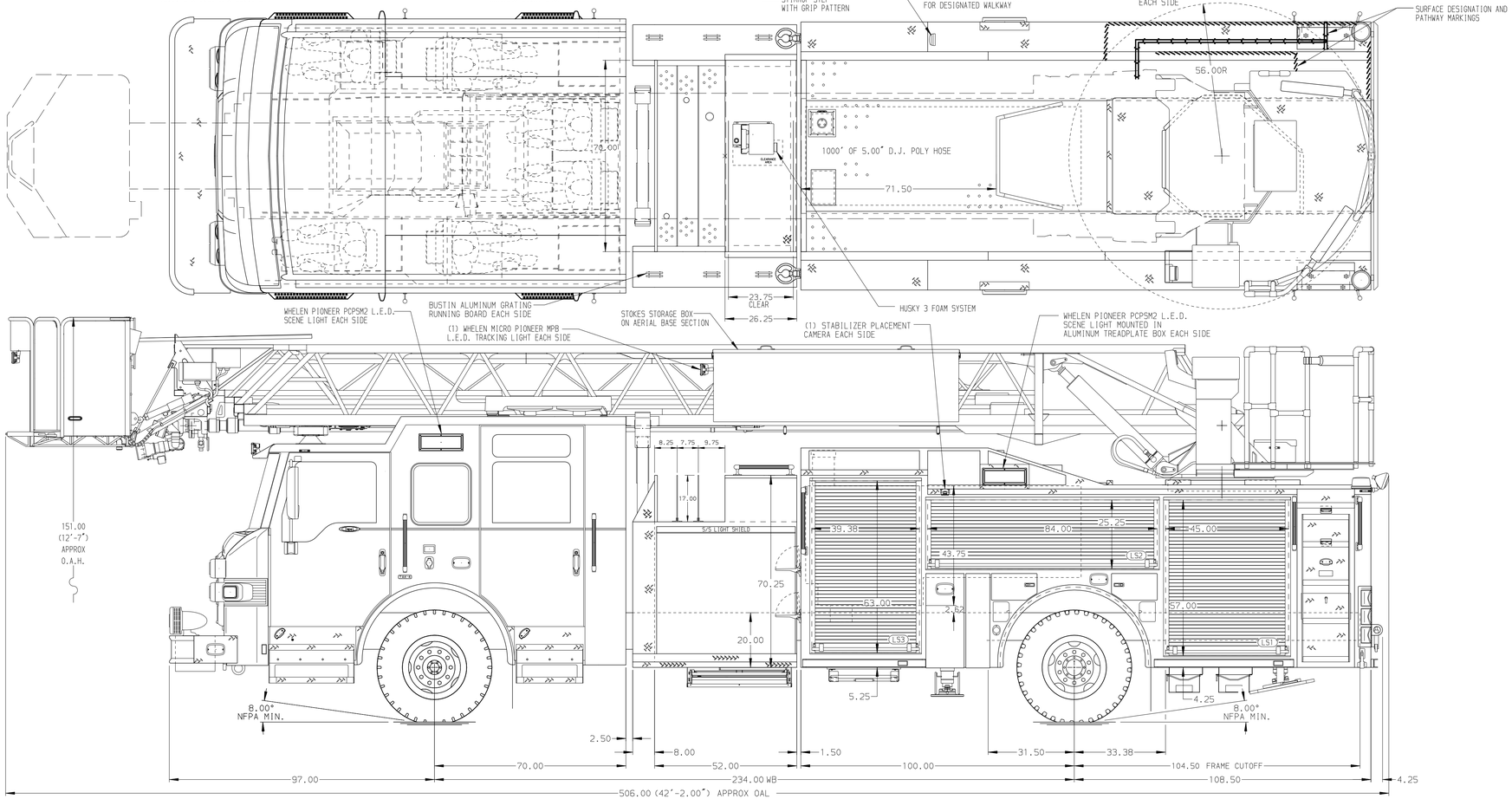

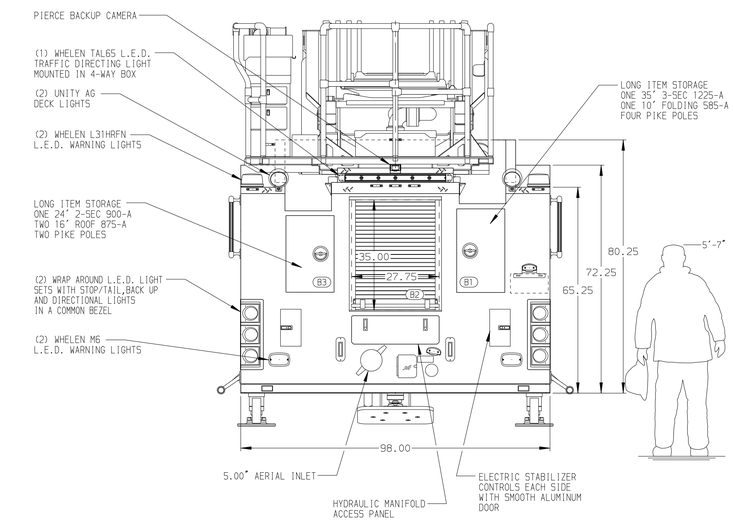

BODY	WATER TANK
110' Single Axle PLatform Aluminum Body	500 Gallon Poly Water Tank
COMPT,DRIVER SIDE FRONT	Foam System
Full Height Rollup Forward	Husky 3 Single Agent Foam System
COMPT,DRIVER SIDE REAR	Foam Cell
Full Height Rollup Rearward	20 Gallon Foam Cell, Reduced Water
COMPT,PASSENGER SIDE FRONT	
Full Height Rollup Forward	
COMPT,PASSENGER SIDE REAR	
Full Height Rollup Rearward	

CHASSIS	CAB	AXLE,FRONT,CUSTOM	TRANSMISSION	PUMPHOUSE	CROSSLAYS,1.50"	SPEEDLAYS	SAFETY
Impel Chassis	7010 Notched Impel FR Cab	22,800 Lb TAK-4	ALLison 5th Gen, 3000 EVS P	52" Control Zone Side Mount	(2) 1.50" Standard Capacity	Speedlays Not Required	Side Roll and Frontal Impact Protection
ENGINE	BUMPER	AXLE,REAR		PUMP	CROSSLAYS,2.50"	GENERATOR	
450 HP Cummins L9 Engine	19" Extended Stainless Steel	33,500 Lb Meritor Axle		2000 GPM Waterous CSU	(1) 2.50" Standard Capacity	Generator Not Required	

CUSTOMER APPROVAL

APPROVED BY: _____

DATE: _____

NOTE

DIMENSIONS SHOWN ARE APPROXIMATE AND ARE SUBJECT TO MINOR DEVIATIONS AS MAY OCCUR OR BE NECESSARY IN CONSTRUCTION.
MINOR DETAILS NOT SHOWN.

1. ONE 1.50 OUTLET WITH 2.00 PIPING AND SWIVEL LOCATED IN CENTER BUMPER TRAY
2. SHORELINE RECEPTACLE WITH KUSSMAUL SUPER AUTO-EJECT LOCATED ON DRIVER SIDE OF THE CAB
3. AIR INLET WITH DISCONNECT COUPLING IN THE DRIVER SIDE STEPWELL
4. BATTERY CHARGER LOCATED BEHIND DRIVERS SEAT
5. BATTERY CHARGE INDICATOR LOCATED ON THE DRIVER SIDE CAB
6. SIX ADJUSTABLE SHELVES IN COMPARTMENTS PER SHOP ORDER
7. FOUR FLOOR MOUNTED SLIDE-OUT TRAYS IN COMPARTMENTS PER SHOP ORDER
8. NON-RAISED AERIAL PEDESTAL
9. 1250 GPM HIGH FLOW WATERWAY
10. NO LIMITED RETRACTION

REV	DATE	BY	CH
▽	-	-	-

CHASSIS DATA

MAKE: PIERCE

MODEL: -

Pierce MANUFACTURING INC.

TITLE: 110' ASCENDANT AERIAL PLATFORM AND BODY ASSEMBLY
-

FOR: PIERCE FIELD UNIT
APPLETON, WISCONSIN

DWG NO.: 33223AD

JOB NO.	33223
SCALE	1:24
DATE	
DRAWN BY	LWE
	230CT18
CHECKED BY	THS
	290CT18
SHEET SIZE	D
SHEET NO.	1 OF 1

View File Created 30-OCT-2018 07:11:31