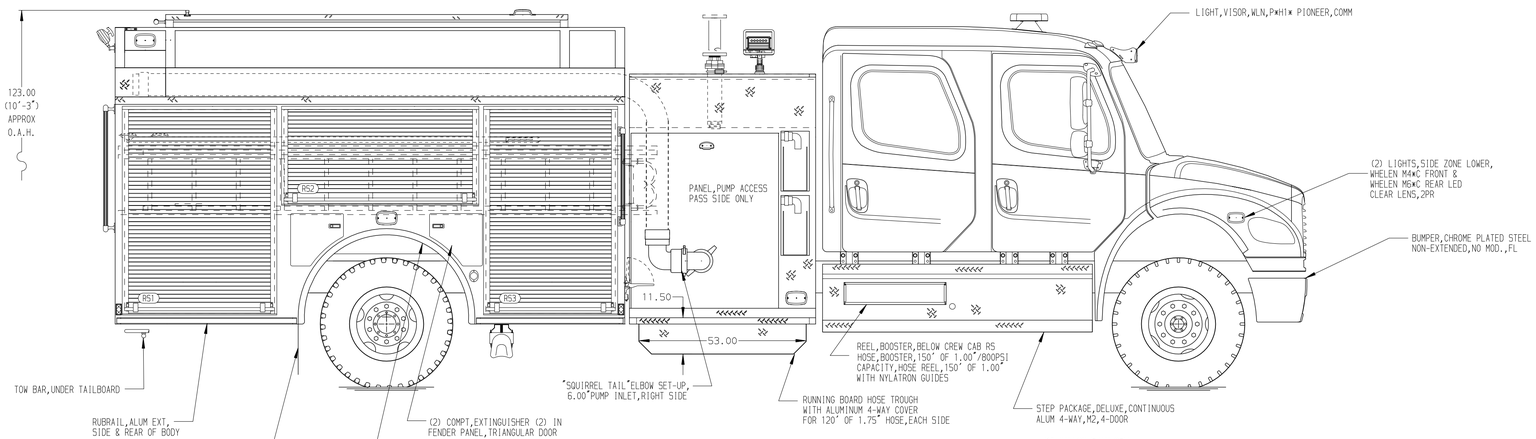

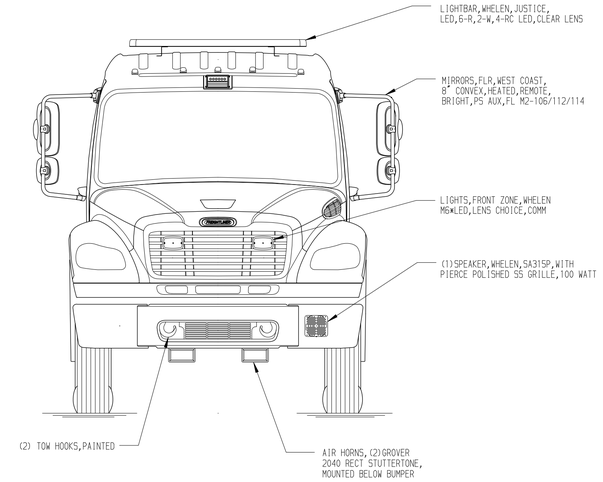

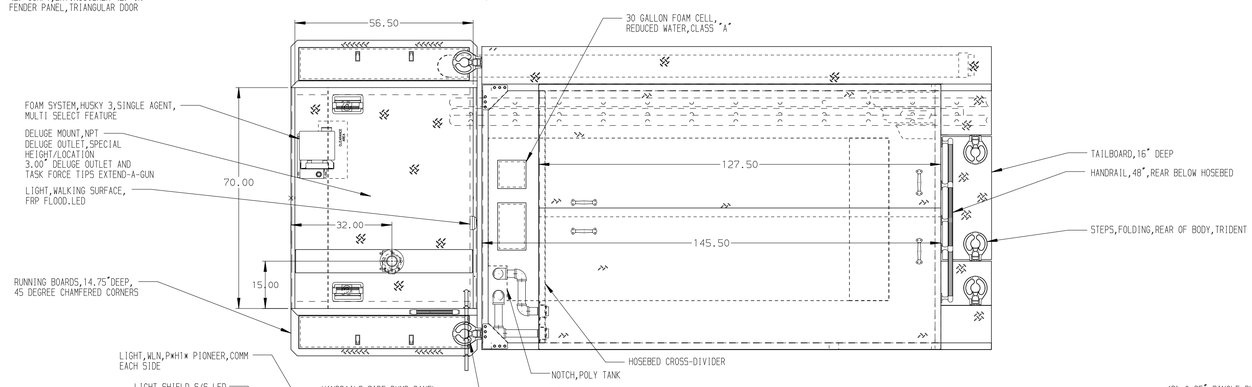

HOSEBED CAPACITIES

1. 150' OF 3.00" D.J. POLYESTER HOSE
2. 150' OF 3.00" D.J. POLYESTER HOSE
3. 600' OF 3.00" D.J. POLYESTER HOSE
4. 600' OF 5.00" D.J. POLYESTER HOSE

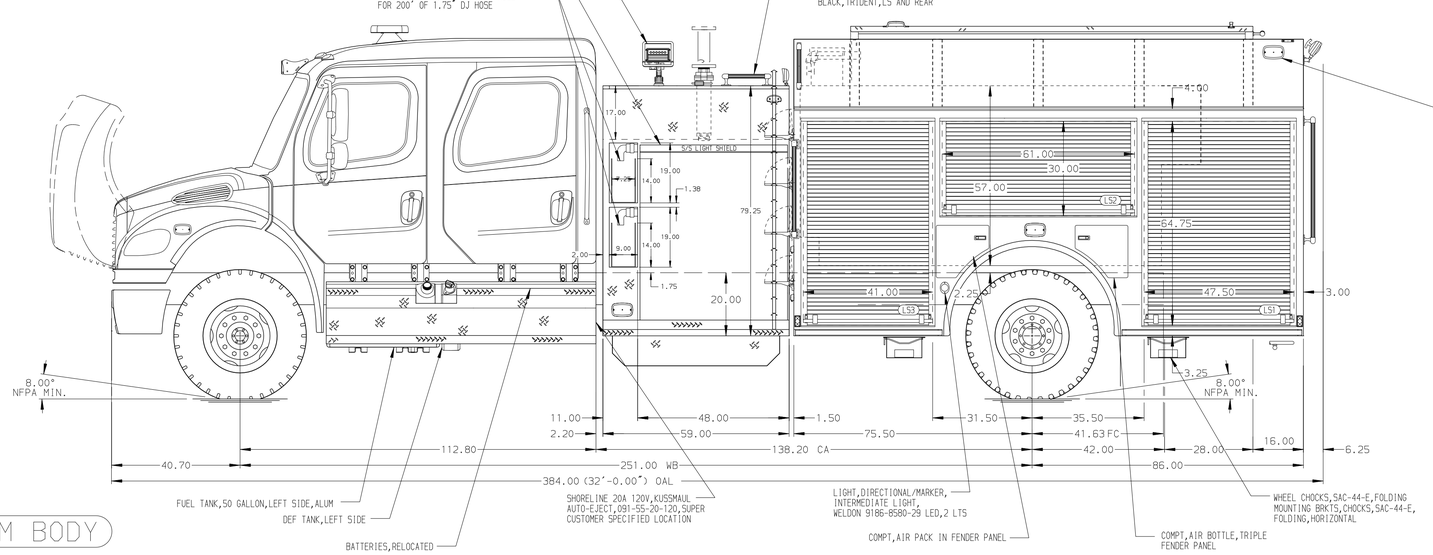

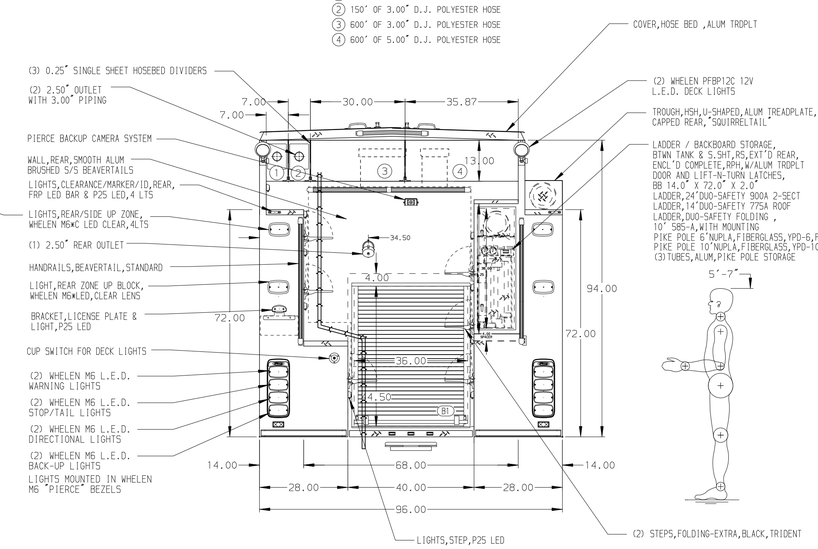

ALUMINUM BODY

NOTE

DIMENSIONS SHOWN ARE APPROXIMATE AND ARE SUBJECT TO MINOR DEVIATIONS AS MAY OCCUR OR BE NECESSARY IN CONSTRUCTION.
MINOR DETAILS NOT SHOWN.

REV	DATE	BY	CH
5	24JUN19	JLA	GSC
4	13JUN19	JLA	GSC
3	12JUN19	JLA	GSC
2	29MAR19	JAF	RWI

CHASSIS DATA — MAKE: FL — MODEL: M2-106

Pierce MANUFACTURING INC.
BRADENTON, FLORIDA

TITLE: 1250-D-1220 POLY,30 FOAM,161"BODY,DS & PS FULL HGT 48"SIDE CONTROL,(2)1.50" SPEEDLAYS W/TRAYS

FOR: JASPER COUNTY FIRE RESCUE
RIDGELAND SOUTH CAROLINA

DWG NO.: 33248AD

JOB NO.	33248
SCALE	1:24
DATE	
DRAWN BY	JAF 06MAR19
CHECKED BY	RWI 08MAR19
SHEET SIZE	D
SHEET NO.	1 OF 1

View File Created 26-JUN-2019 07:23:05