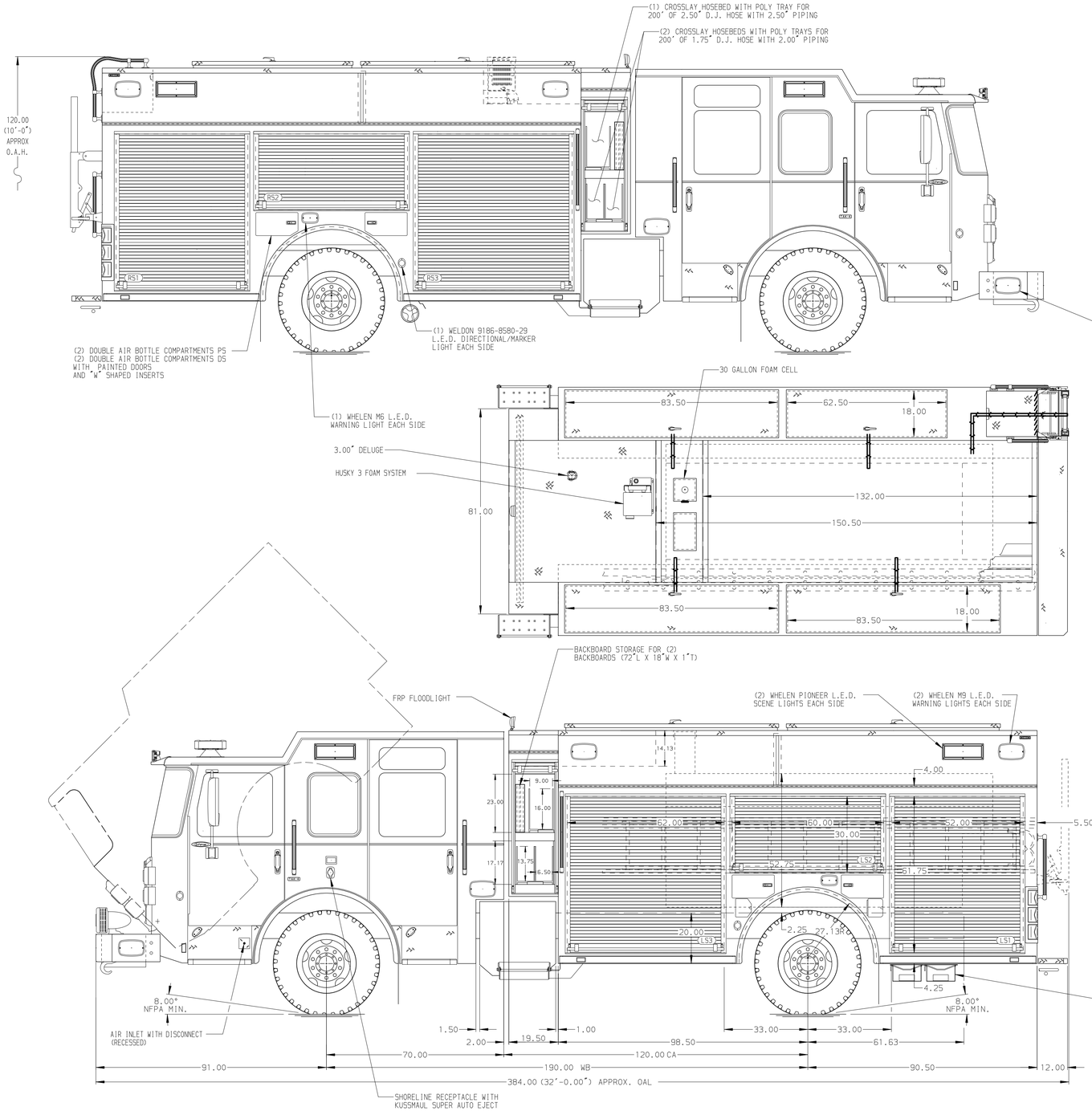


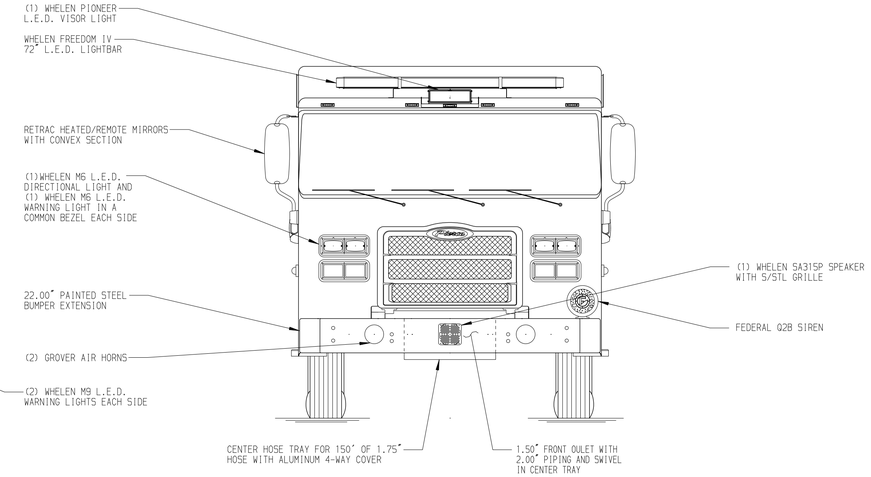


HOSEBED CAPACITIES
1. 1000' OF 5.00" D.J. POLY HOSE
2. 600' OF 2.50" D.J. POLY HOSE

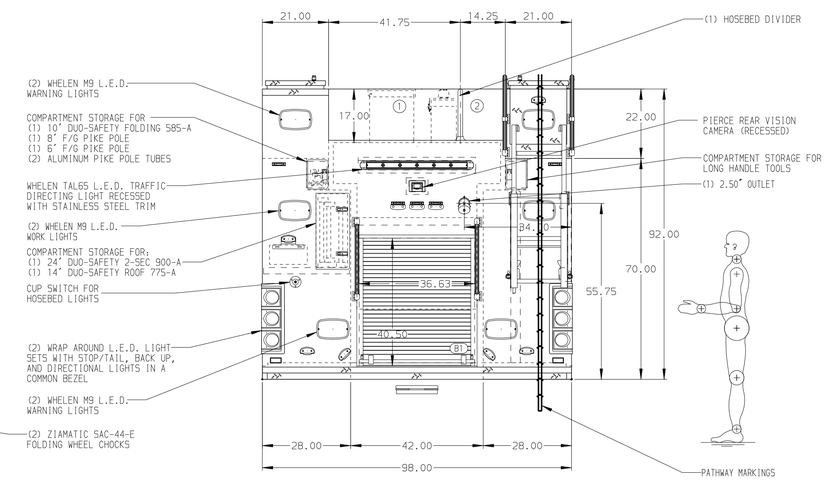


ALUMINUM BODY

SIDE ROLL & FRONTAL IMPACT PROTECTION

NOTE

DIMENSIONS SHOWN ARE APPROXIMATE AND ARE SUBJECT TO MINOR DEVIATIONS AS MAY OCCUR OR BE NECESSARY IN CONSTRUCTION.
MINOR DETAILS NOT SHOWN.

1. BATTERY CHARGER LOCATED IN PUC PLUMBING AREA
2. ONE FULL WIDTH/DEPTH ADJUSTABLE PAINTED SHELF IN COMPARTMENTS LS1, LS3, RS1 & RS3
3. ONE FLOOR MOUNTED SLIDE-OUT TRAY WITH 2" SIDES IN COMPARTMENTS LS1, LS3, RS1 & RS3
4. ONE SWING-OUT PEG BOARD TOOL BOARD IN COMPARTMENTS LS2 & RS2

**CUSTOMER APPROVAL**

APPROVED BY: _____

DATE: _____

| REV | DATE | BY | CH |
|---|---|---|---|
| ▽ | - | - | - |

CHASSIS DATA
MAKE: PIERCE
MODEL: ENFORCER

**Pierce MANUFACTURING INC.**

TITLE: 1500-D-1000P W/30 GAL FOAM CELL, 189" PUC BODY FULL HGHT & DPTH; LADDERS THRU BODY DS

FOR: PIERCE STOCK UNIT APPLETON, WI

DWG NO. 33257AD

| JOB NO. | 33257 |
|---|---|
| SCALE 1:24 | DATE |
| DRAWN BY COL | 13NOV18 |
| CHECKED BY THS | 13NOV18 |
| SHEET SIZE D | SHEET NO. 1 OF 1 |

View File Created 13-NOV-2018 09:41:29