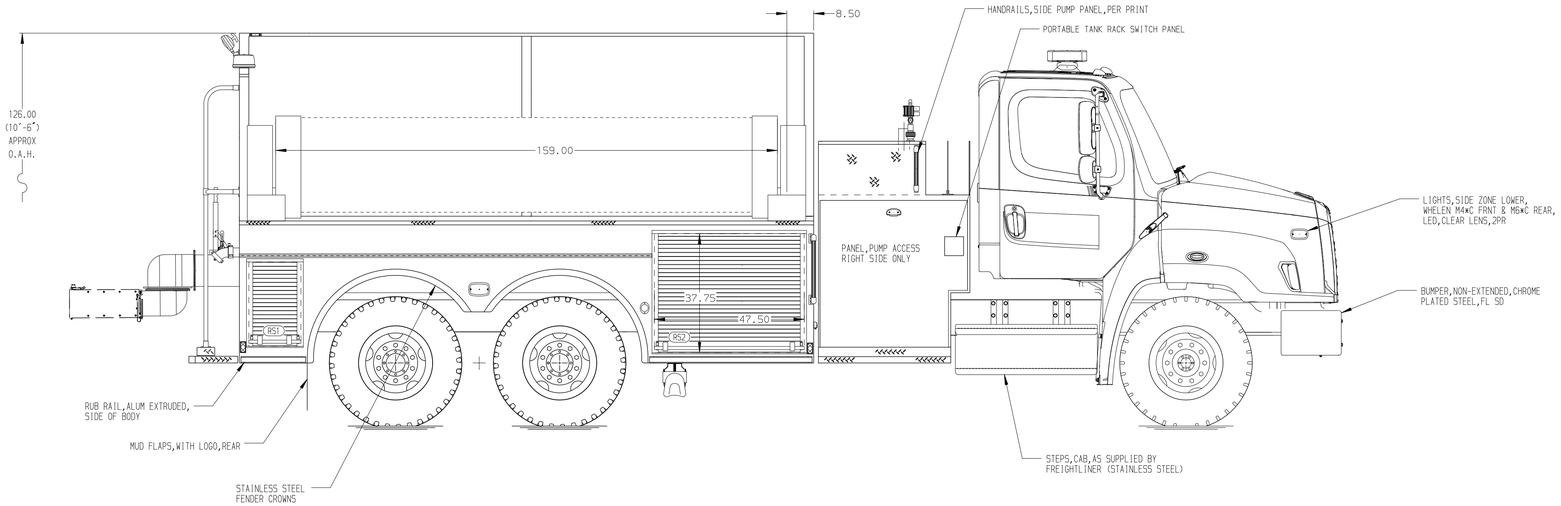

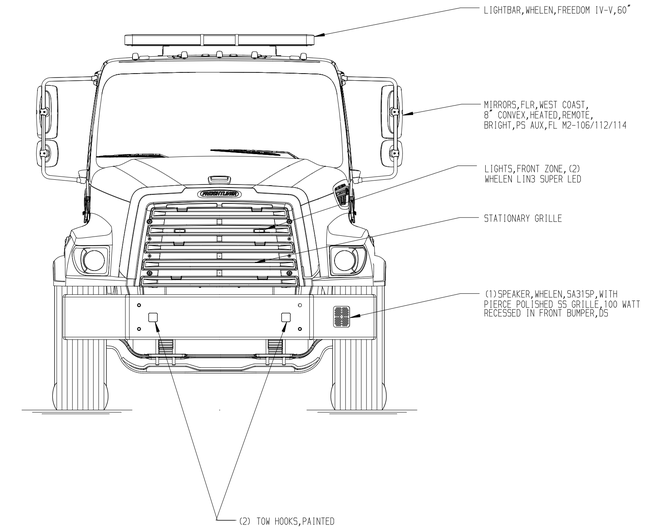

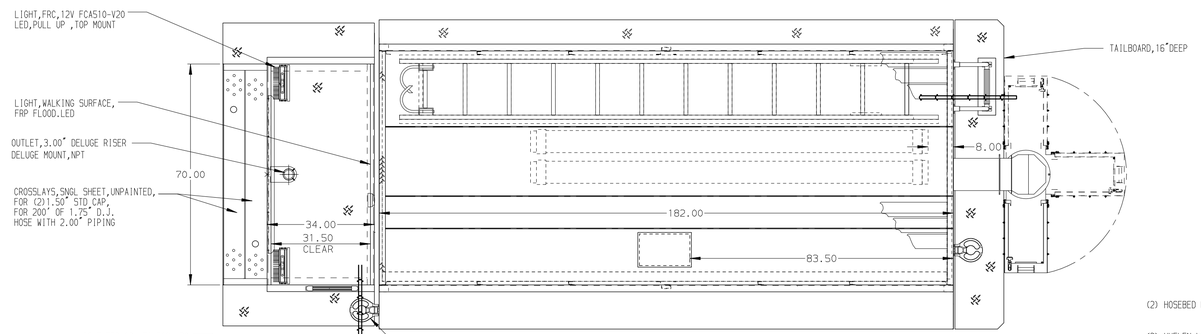

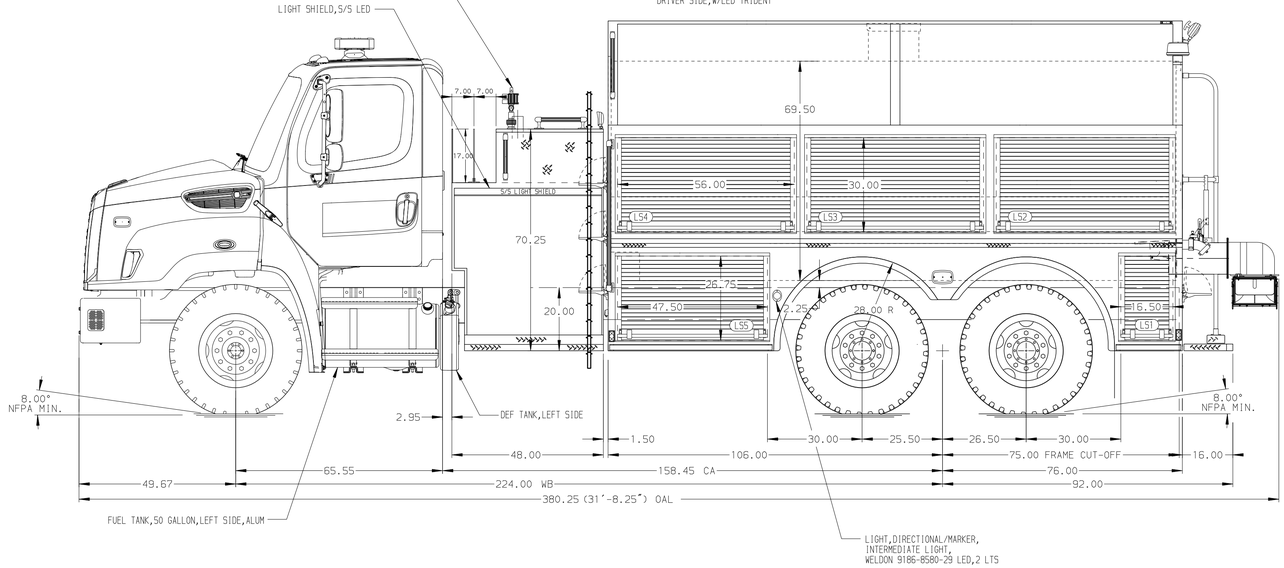

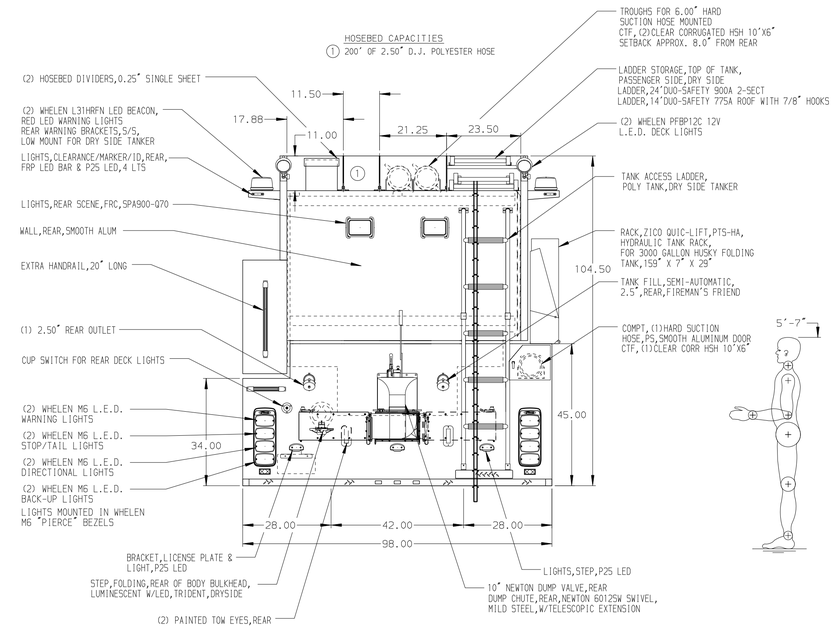

ALUMINUM BODY

NOTE

DIMENSIONS SHOWN ARE APPROXIMATE AND ARE SUBJECT TO MINOR DEVIATIONS AS MAY OCCUR OR BE NECESSARY IN CONSTRUCTION.
MINOR DETAILS NOT SHOWN.

REV	DATE	BY	CH
5	16APR19	JAF	GSC
4	04MAR19	JAF	RWI

CHASSIS DATA
MAKE: FL
MODEL: 114SD

Pierce MANUFACTURING INC.
BRADENTON, FLORIDA

TITLE: 1500-D-3000,182"HIGH SIDE DRYSIDE BODY
48"SIDE CONTROL,(2)1.5"CROSSLAYS

FOR: RICHBURG/WIRT FIRE COMPANY
RICHBURG,NEW YORK

DWG NO. 33263AD

JOB NO.	33263
SCALE 1:24	DATE
DRAWN BY JAF	06FEB19
CHECKED BY RWI	15FEB19
SHEET SIZE D	SHEET NO. 1 OF 1

View File Created 15-MAY-2019 07:39:23