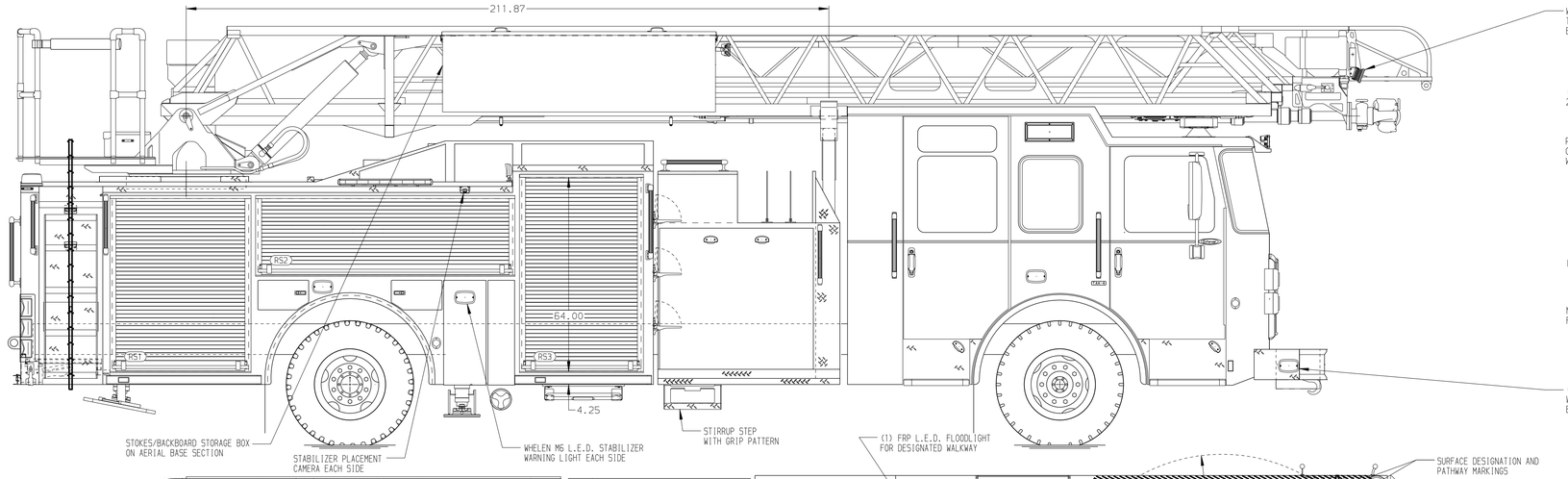

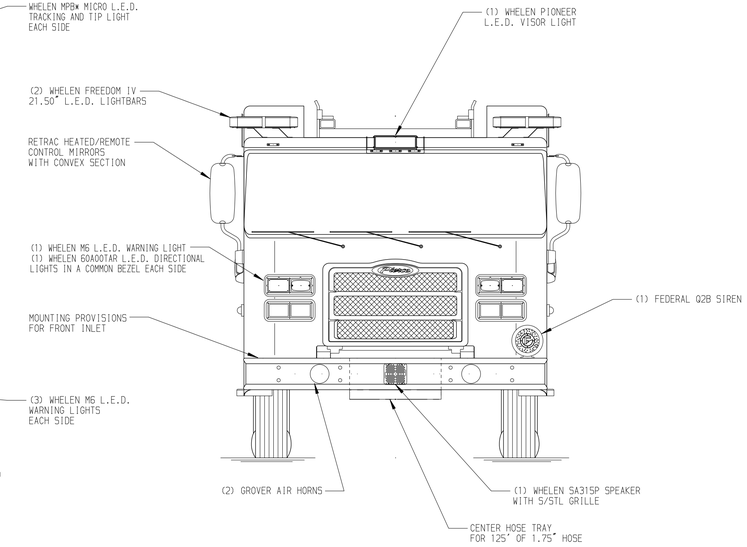

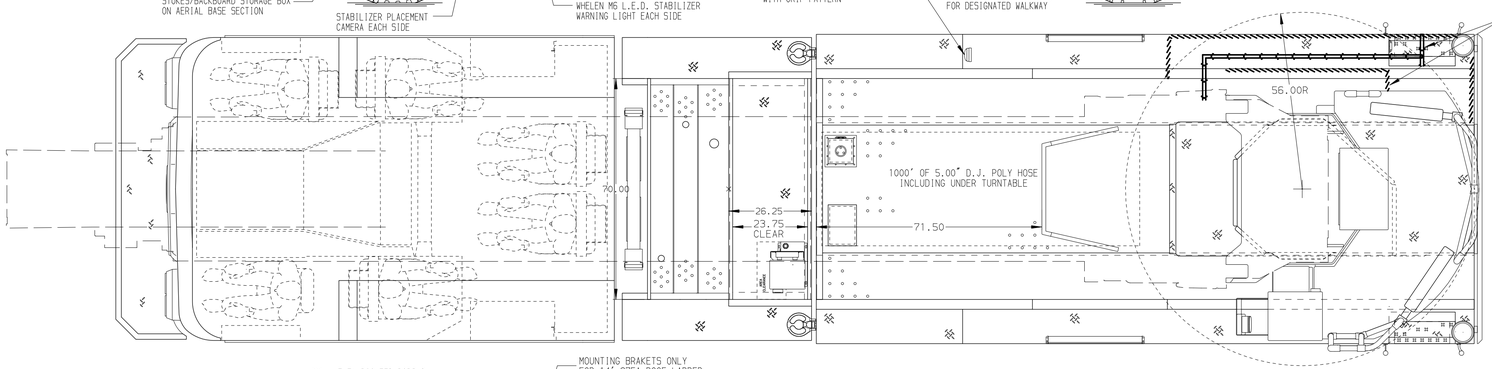

BODY	WATER TANK
107' ASL Aluminum Body	475 Gallon Poly Water Tank
COMPT,LEFT SIDE FRONT	Foam System
Full Height Rollup Forward	Plumbing For Future Husky Foam System
COMPT,LEFT SIDE REAR	Foam Cell
Full Height Rollup Rearward	25 Gallon Foam Cell, Reduced Water
COMPT,RIGHT SIDE FRONT	
Full Height Rollup Forward	
COMPT,RIGHT SIDE REAR	
Full Height Rollup Rearward	

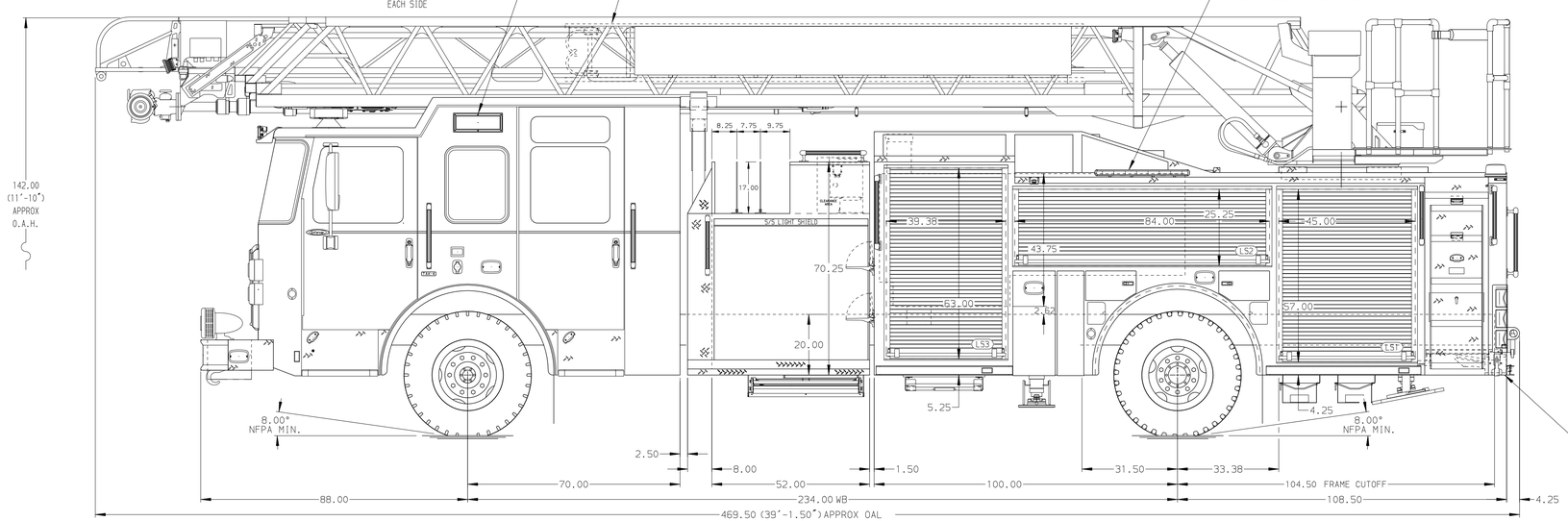

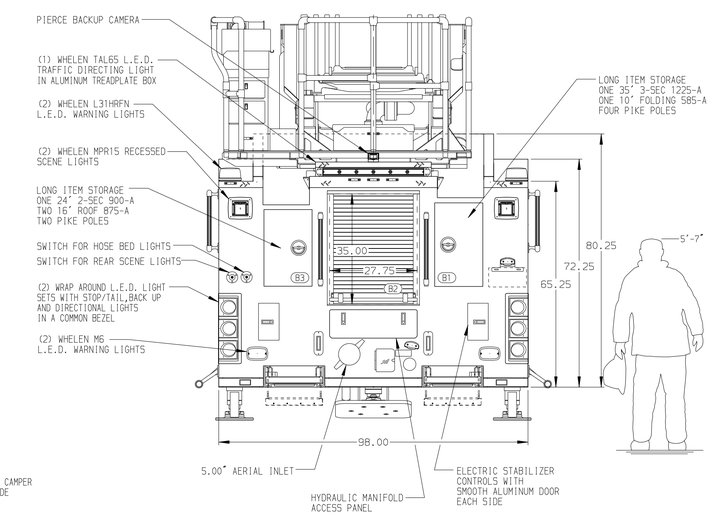

CHASSIS	CAB	AXLE,FRONT,CUSTOM	TRANSMISSION	PUMPHOUSE	CROSSLAYS,1.50"	SPEEDLAYS	SAFETY
Enforcer Chassis	7010 Enforcer Notched Cab	22,800 Lb TAK-4 Axle	Allison 5th Gen, 3000 EVS P	52" Control Zone Side Mount	(2) 1.50" Standard Capacity	Speedlays Not Required	Side Roll and Frontal Impact Protection
ENGINE	BUMPER	AXLE,REAR		PUMP	CROSSLAYS,2.50"	GENERATOR	
450 HP Cummins L9 Engine	19" Extended Painted Steel	33,500 Lb Meritor Axle		2000 GPM Waterous CSU	(1) 2.50" Standard Capacity	Generator Not Required	

CUSTOMER APPROVAL

APPROVED BY: _____

DATE: _____

Pierce MANUFACTURING INC.

NOTE

DIMENSIONS SHOWN ARE APPROXIMATE AND ARE SUBJECT TO MINOR DEVIATIONS AS MAY OCCUR OR BE NECESSARY IN CONSTRUCTION.
MINOR DETAILS NOT SHOWN.

1. ONE 1.50 OUTLET WITH 2.00 PIPING AND SWIVEL LOCATED IN CENTER BUMPER TRAY
2. SHORELINE RECEPTACLE WITH KUSSMAUL SUPER AUTO-EJECT LOCATED ON DRIVER SIDE OF THE CAB
3. AIR INLET WITH DISCONNECT COUPLING IN THE DRIVER SIDE STEPWELL
4. BATTERY CHARGER LOCATED IN COMPARTMENT PER SHOP ORDER
5. BATTERY CHARGE INDICATOR LOCATED ON DRIVERS SIDE CAB
6. SIX ADJUSTABLE SHELVES IN COMPARTMENTS PER SHOP ORDER
7. FOUR FLOOR MOUNTED SLIDE-OUT TRAY IN COMPARTMENT PER SHOP ORDER
8. NON-RAISED AERIAL PEDESTAL
9. 1500 GPM HIGH FLOW WATERWAY
10. DUAL L.E.D. LIGHT STRIPS LOCATED IN HOSE BED
11. LIFTING EYE ROPE RESCUE ATTACHMENT AT AERIAL TIP
12. NO LIMITED RETRACTION

REV	DATE	BY	CH
-	-	-	-

CHASSIS DATA — MAKE: PIERCE — MODEL: ENFORCER

TITLE: 107' ASCENDANT AERIAL LADDER AND BODY ASSEMBLY
-

FOR: PIERCE FIELD UNIT
APPLETON, WI

DWG NO. 33265AD

JOB NO.	33265
SCALE	1:24
DATE	
DRAWN BY	LWE
	08NOV18
CHECKED BY	THS
	12NOV18
SHEET SIZE	D
SHEET NO.	1 OF 1

View File Created 13-NOV-2018 07:28:16