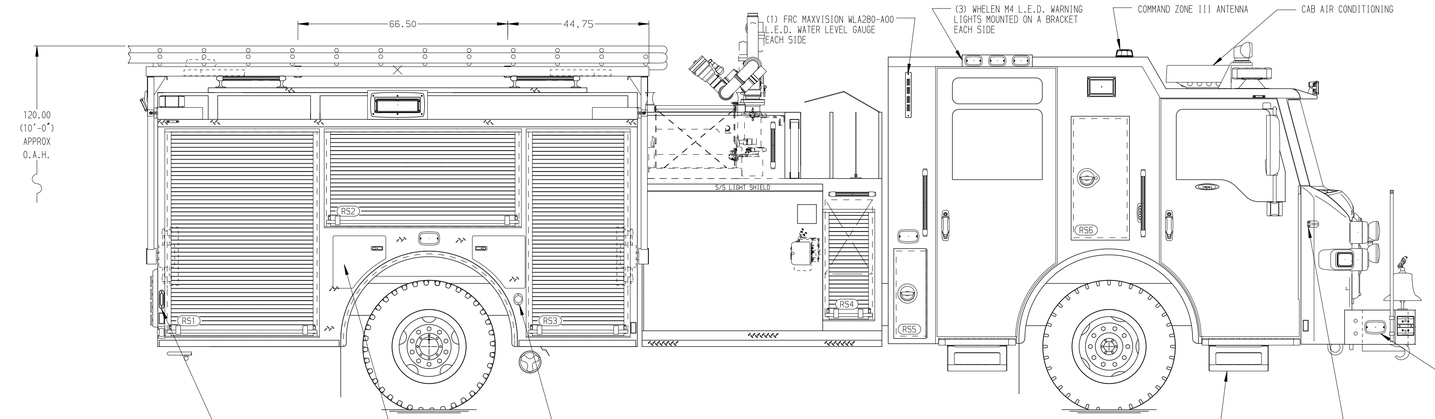

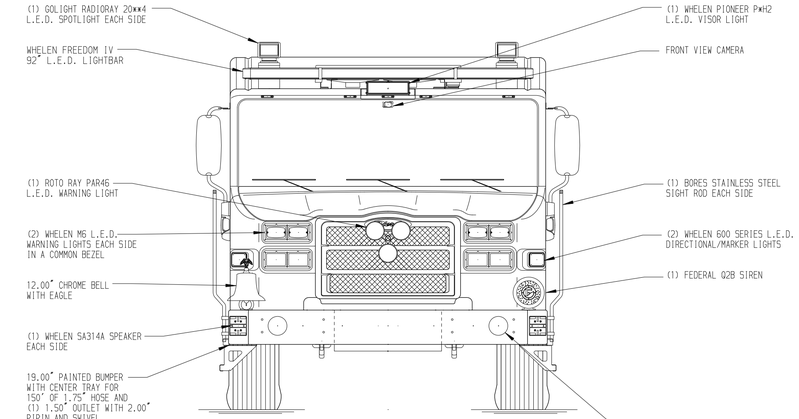

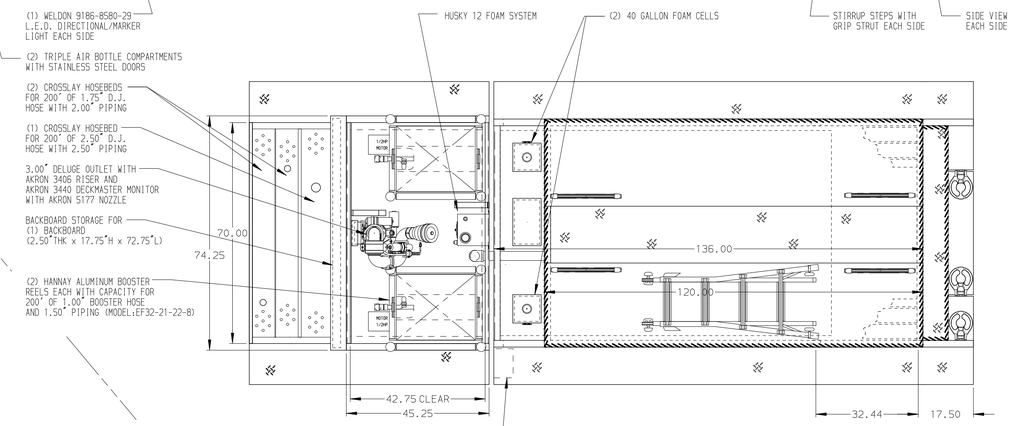

HOSEBED CAPACITIES

1. 1000' OF 3.00" D.J. POLY HOSE
2. 300' OF 2.50" D.J. POLY HOSE
3. 1000' OF 5.00" D.J. POLY HOSE

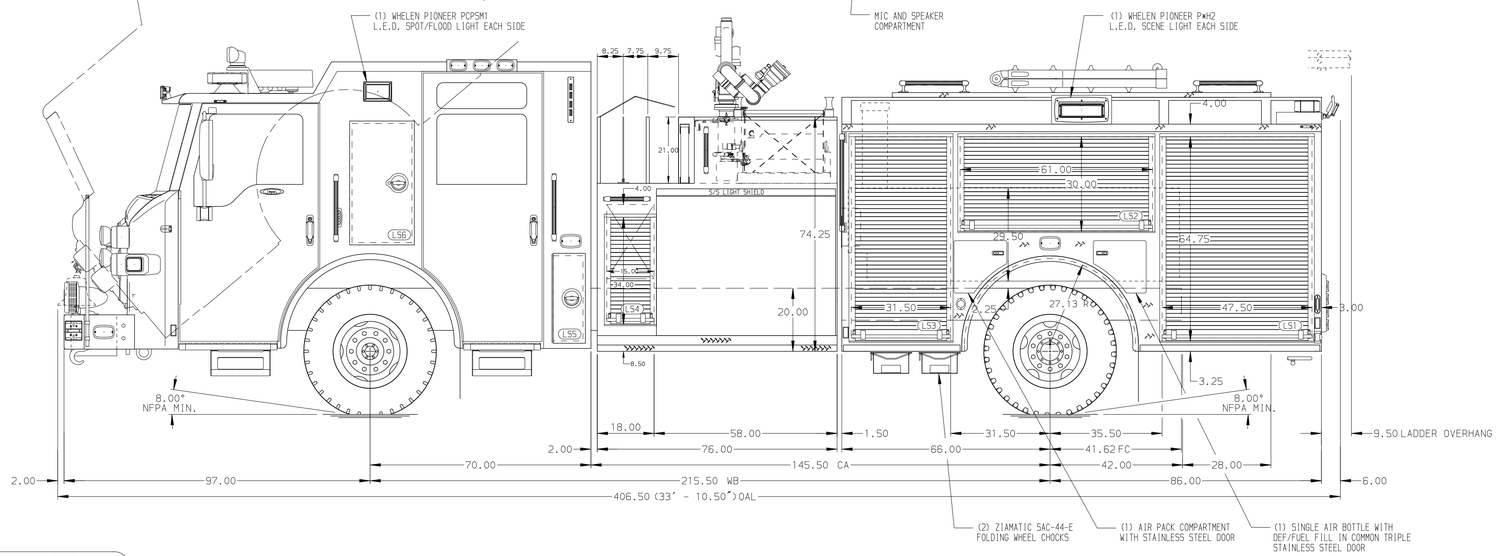

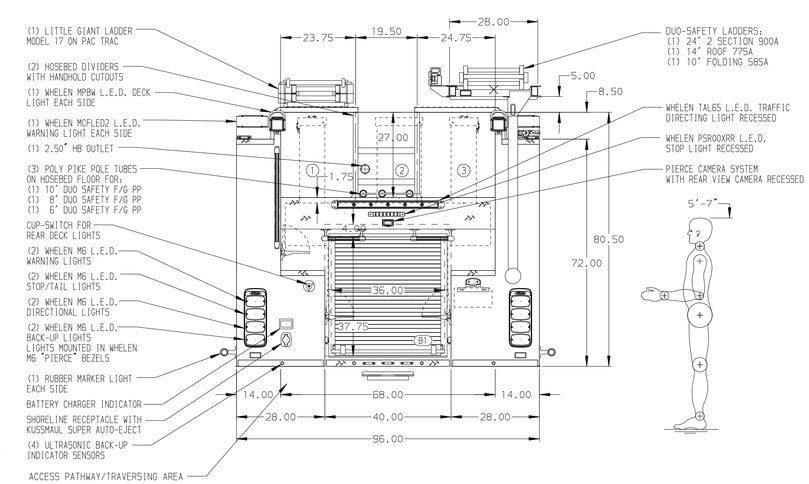

ALUMINUM BODY

NOTE

DIMENSIONS SHOWN ARE APPROXIMATE AND ARE SUBJECT TO MINOR DEVIATIONS AS MAY OCCUR OR BE NECESSARY IN CONSTRUCTION.
MINOR DETAILS NOT SHOWN.

1. AIR INLET WITH DISCONNECT COUPLING LOCATED IN DRVIER'S SIDE STEP WELL
2. AIR OUTLET WITH SHUT OFF VALVE LOCATED IN DRIVER'S SIDE STEP WELL
3. BATTERY CHARGER LOCATED BEHIND DRIVER'S SEAT ON EMS COMPARTMENT WALL
4. DRIP PAN GUARD FOR ROLL-UP DOOR LOCATED LS1, LS2, LS3, LS4, RS1, RS2, RS3, RS4 & B1
5. ONE FULL WIDTH/DEPTH ADJUSTABLE SHELF IN COMPARTMENT LS2, TWO IN LS1, THREE IN LS3 & RS3
6. ONE FLOOR MOUNTED SLIDE-OUT TRAY IN COMPARTMENT LS1, RS1 & B1
7. TWO ALUMINUM SWING-OUT TOOLBOARDS WITH PAC TRAC IN COMPARTMENT RS1
8. ALL BODY COMPARTMENTS WITH LOUVERS SHALL HAVE A REMOVABLE FILTER
9. ONE CTECH DRAWER ASSEMBLY IN COMPARTMENT RS3
10. TWO VERTICAL DIVIDERS IN COMPARTMENT LS3
11. PAC TRAC ON THE REAR WALL OF COMPARTMENT RS1
12. ONE VERTICAL PARTITION IN COMPARTMENT LS2

REV	DATE	BY	CH
E	04APR19	AMI	JJR
D	19MAR19	AMI	JJR
C	01MAR19	AMI	JJR
B	27DEC18	KLE	KWI
A	05DEC18	AMI	JBL

CHASSIS DATA
MAKE: PIERCE
MODEL: IMPEL

Pierce MANUFACTURING INC.

TITLE: 1500-D-500P W/(2)40 GAL FOAM CELLS, 152" FDLER (3)XLAYS, DELUGE,(2)BOOSTER REELS, HYD. LADDER RACK

FOR: TULSA FIRE DEPARTMENT, TULSA, OKLAHOMA

DWG NO.: 33278AD

JOB NO.: 33278 (01-03)
SCALE: 1:24
DATE
DRAWN BY: AMI 26NOV18
CHECKED BY: SMA 26NOV18
SHEET SIZE: D
SHEET NO.: 1 OF 1

View File Created 05-APR-2019 08:12:53