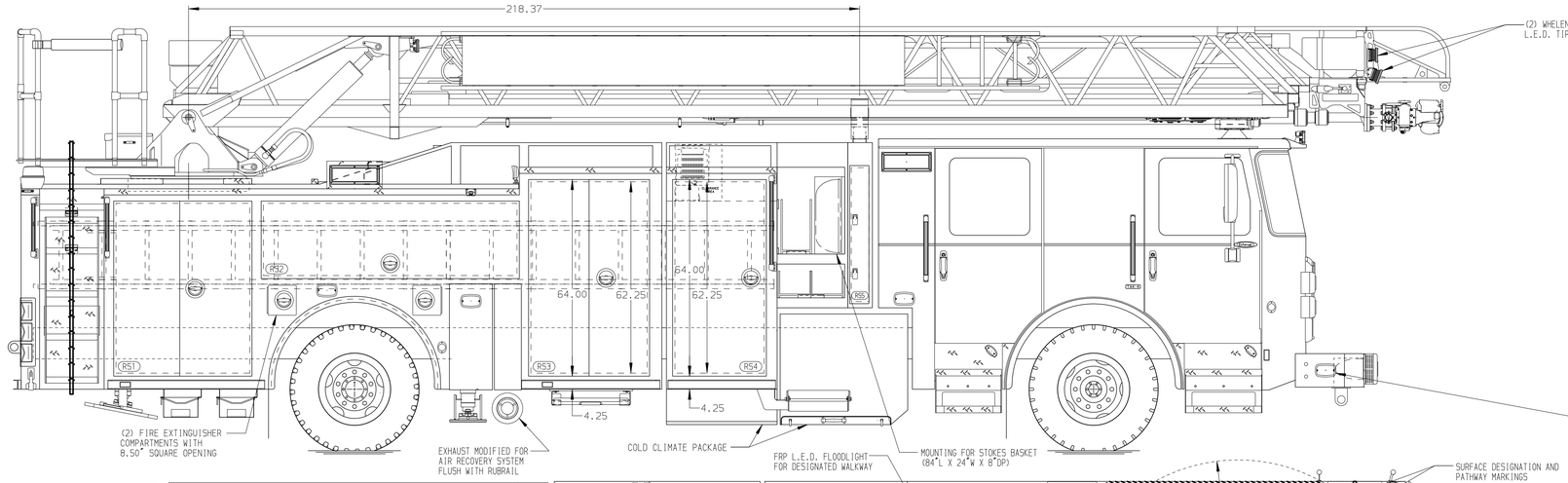

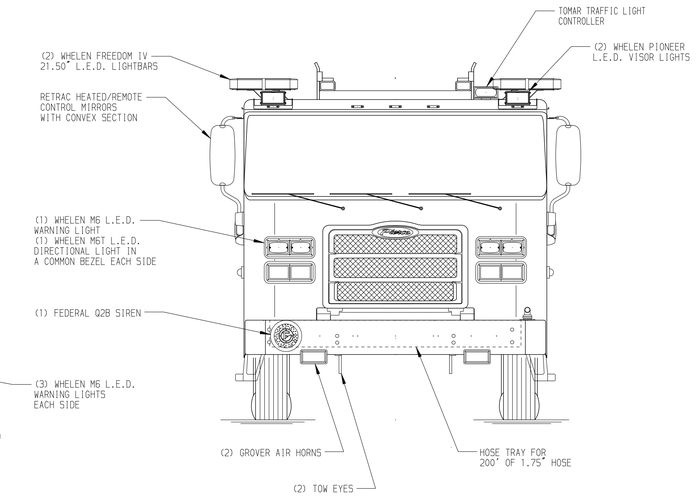

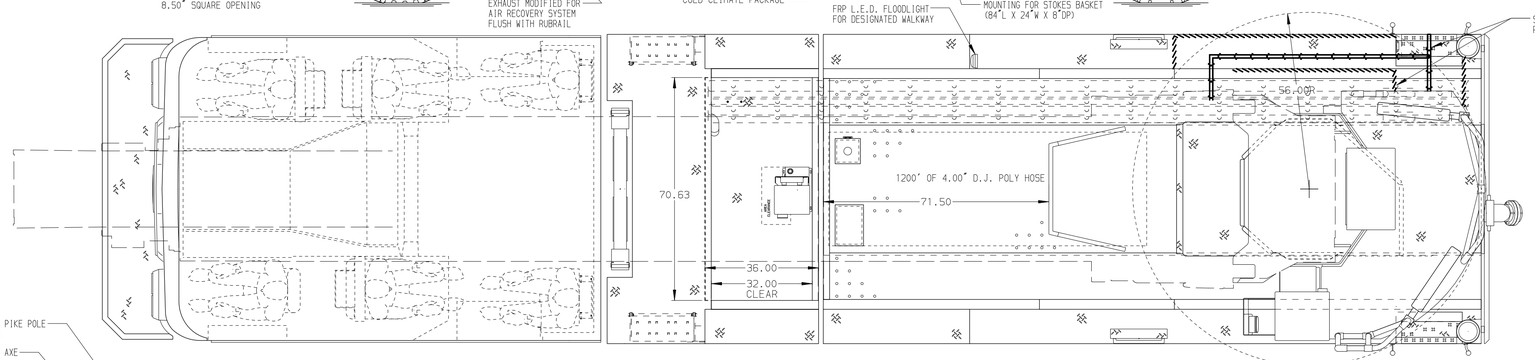

BODY	WATER TANK
107' ASL Aluminum Body PUC	480 Gallon Poly Water Tank
COMPT,LEFT SIDE FRONT	Foam System
Full Height Lap Forward	Husky 3 Single Agent Foam System
COMPT,LEFT SIDE REAR	Foam Cell
Full Height Lap Rearward	20 Gallon Foam Cell, Reduced Water, PUC
COMPT,RIGHT SIDE FRONT	
Full Height Lap Forward	
COMPT,RIGHT SIDE REAR	
Full Height Lap Rearward	

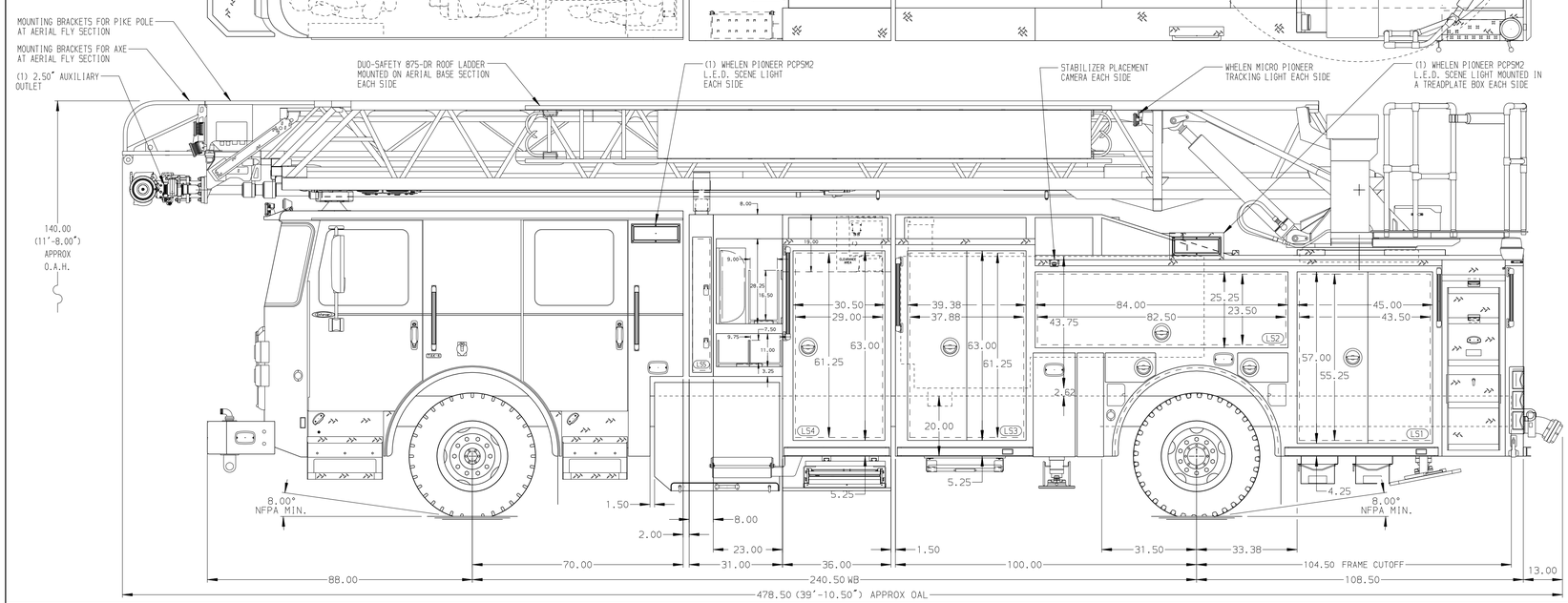

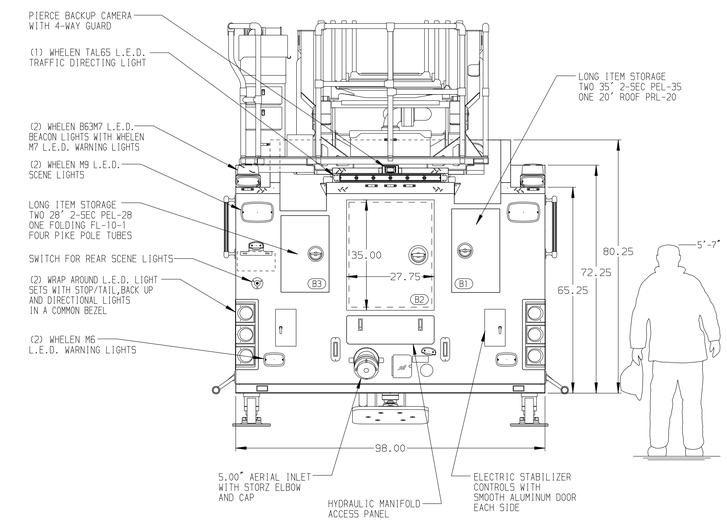

CHASSIS	CAB	AXLE,FRONT,CUSTOM	TRANSMISSION	PUMPHOUSE	CROSSLAYS,1.50"	SPEEDLAYS
Enforcer Chassis, PUC	7000 Enforcer Cab, PUC	22,800 Lb TAK-4 Axle	ALlison 5th Gen, 3000 EVS P	Control Zone, PAL/PAP PUC	(2) 1.50",Full Width Trays,200'	Speedlays Not Required
ENGINE	BUMPER	AXLE,REAR		PUMP	CROSSLAYS,2.50"	GENERATOR
450 HP Cummins L9 Engine	19" Extended Steel, Underslung	33,500 Lb Meritor Axle		1500 GPM Pierce PUC	(1) 2.50",Full Width Tray,200'	Generator Not Required

NOTE

DIMENSIONS SHOWN ARE APPROXIMATE AND ARE SUBJECT TO MINOR DEVIATIONS AS MAY OCCUR OR BE NECESSARY IN CONSTRUCTION.
MINOR DETAILS NOT SHOWN.

1. ONE 1.50 OUTLET WITH 2.00 PIPING AND SWIVEL LOCATED ON THE LEFT SIDE OF THE FRONT BUMPER
2. SHORELINE RECEPTACLE LOCATED ON DRIVER SIDE OF THE CAB
3. AIR INLET WITH DISCONNECT COUPLING IN THE DRIVER SIDE STEPWELL
4. BATTERY CHARGER LOCATED BEHIND THE DRIVER SEAT
5. BATTERY CHARGE INDICATOR LOCATED ON THE DRIVER SIDE SEAT RISER
6. TEN ADJUSTABLE SHELVES IN COMPARTMENTS PER SHOP ORDER
7. THREE FLOOR MOUNTED SLIDE-OUT TRAYS IN COMPARTMENTS PER SHOP ORDER
8. TWO SLIDE-OUT TOOL BOARDS WITH PEGBOARD PATTERN IN COMPARTMENTS PER SHOP ORDER
9. ONE CTECH (3) DRAWER ASSEMBLY IN COMPARTMENT PER SHOP ORDER
10. FOUR 120V RECEPTACLES LOCATED PER SHOP ORDER
11. NON-RAISED AERIAL PEDESTAL
12. 1500 GPM HIGH FLOW WATERWAY
13. NO LIMITED RETRACTION
14. LITTLE GIANT REVOLUTION XE MODEL17 (12017) SHIPPED LOOSE

MAXIMUM O.A.H. = 140.00" (11'-8.00")

REV	DATE	BY	CH
7	21FEB19	TKA	KBO
6	12DEC18	TKA	KBO

CHASSIS DATA
MAKE: PIERCE
MODEL: ENFORCER

Pierce MANUFACTURING INC.

TITLE: 107' ASCENDANT AERIAL LADDER AND BODY ASSEMBLY
-
FOR: LEWISTON FIRE DEPARTMENT
LEWISTON, MAINE
DWG NO.: 33286AD

JOB NO.	SCALE	DRAWN BY	CHECKED BY	SHEET SIZE	SHEET NO.
33286	1:24	TKA	GRM	D	1 OF 1

DATE: 20NOV18 / 27NOV18

View File Created 04-MAR-2019 08:30:14