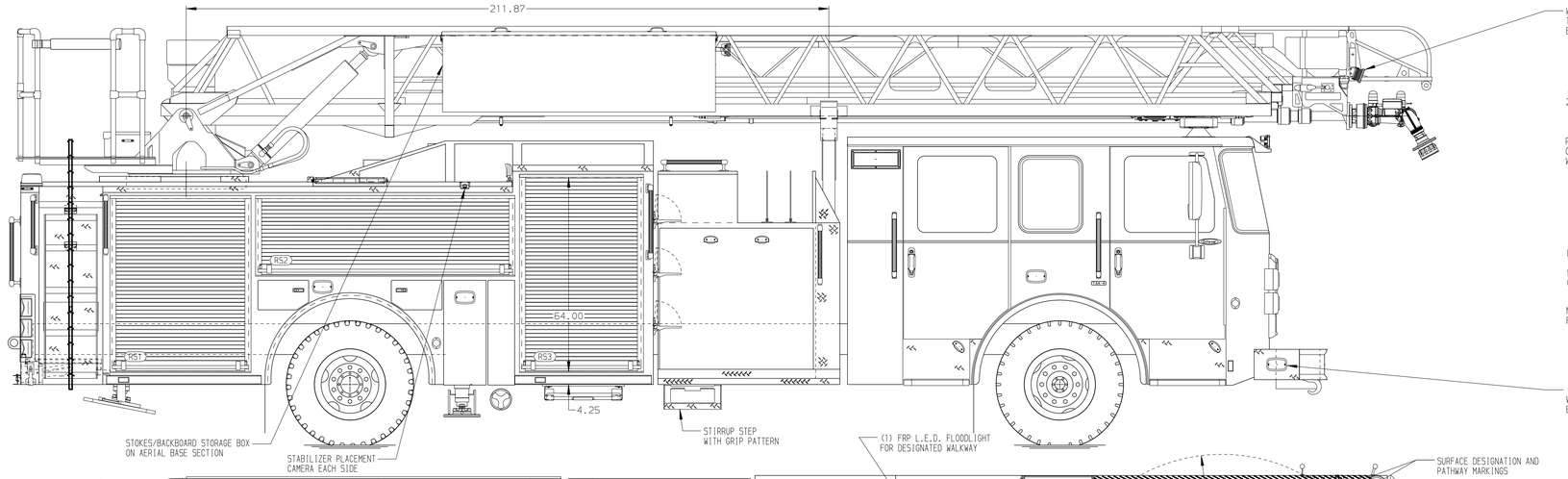

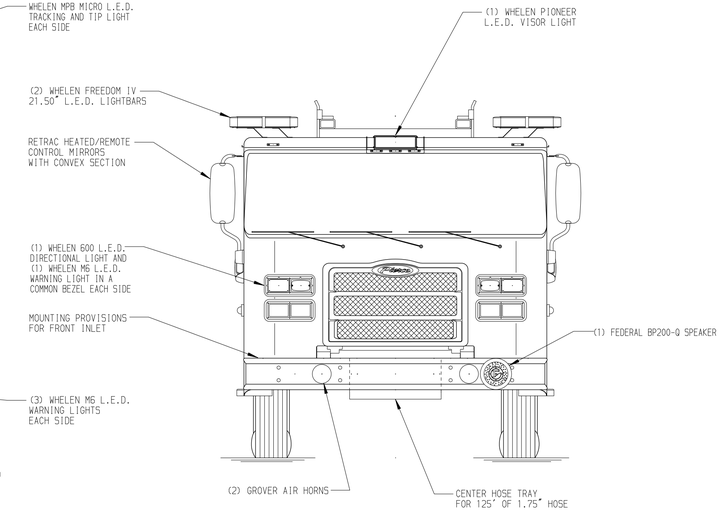

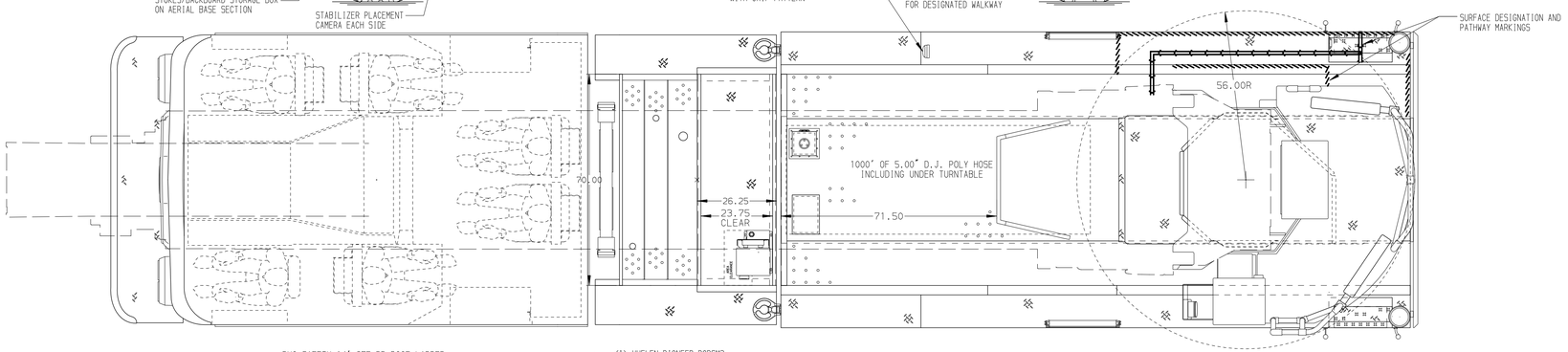

BODY	WATER TANK
107' ASL Aluminum Body	480 Gallon Poly Water Tank
COMPT,LEFT SIDE FRONT	**Foam System**
Full Height Rollup Forward	Plumbing For Future Husky Foam System
COMPT,LEFT SIDE REAR	**Foam Cell**
Full Height Rollup Rearward	20 Gallon Foam Cell, Reduced Water
COMPT,RIGHT SIDE FRONT	
Full Height Rollup Forward	
COMPT,RIGHT SIDE REAR	
Full Height Rollup Rearward	

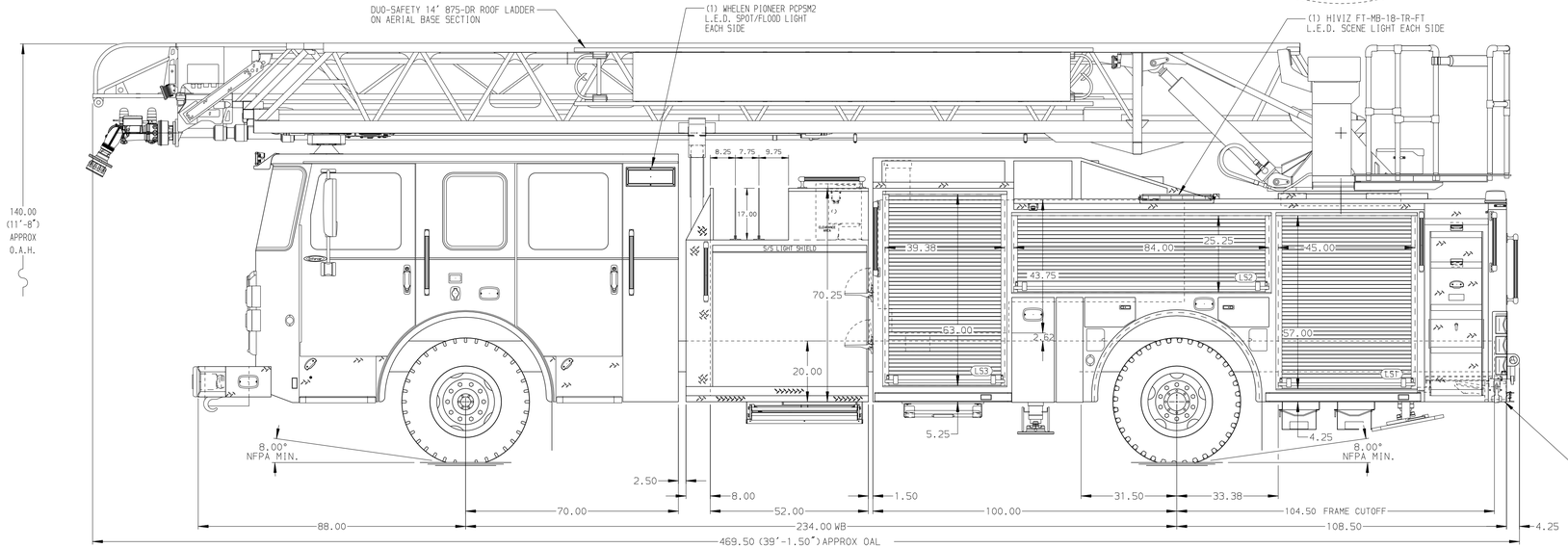

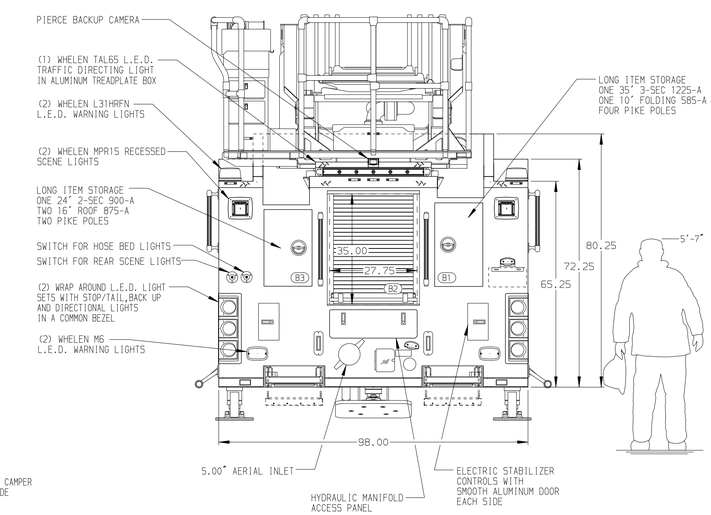

CHASSIS	CAB	AXLE,FRONT,CUSTOM	TRANSMISSION	PUMPHOUSE	CROSSLAYS,1.50"	SPEEDLAYS
Enforcer Chassis	7000 Enforcer Cab	22,800 Lb Dana Axle	Allison 5th Gen, 3000 EVS P	52" Control Zone Side Mount	(2) 1.50" Standard Capacity	Speedlays Not Required
ENGINE	**BUMPER**	**AXLE,REAR**		**PUMP**	**CROSSLAYS,2.50"**	**GENERATOR**
450 HP Cummins L9 Engine	19" Extended Stainless Steel	33,500 Lb Meritor Axle		2000 GPM Waterous CSU	(1) 2.50" Standard Capacity	Generator Not Required

CUSTOMER APPROVAL

APPROVED BY: _____

DATE: _____

Pierce MANUFACTURING INC.

NOTE

DIMENSIONS SHOWN ARE APPROXIMATE AND ARE SUBJECT TO MINOR DEVIATIONS AS MAY OCCUR OR BE NECESSARY IN CONSTRUCTION.
MINOR DETAILS NOT SHOWN.

1. ONE 1.50 OUTLET WITH 2.00 PIPING AND SWIVEL LOCATED IN CENTER BUMPER TRAY
2. SHORELINE RECEPTACLE WITH KUSSMAUL SUPER AUTO-EJECT LOCATED ON DRIVER SIDE OF THE CAB
3. AIR INLET WITH DISCONNECT COUPLING IN THE DRIVER SIDE STEPWELL
4. BATTERY CHARGER LOCATED BEHIND DRIVER SEAT
5. BATTERY CHARGE INDICATOR LOCATED ON DRIVERS SIDE CAB
6. SIX ADJUSTABLE SHELVES IN COMPARTMENTS PER SHOP ORDER
7. FOUR FLOOR MOUNTED SLIDE-OUT TRAYS IN COMPARTMENTS PER SHOP ORDER
8. NON-RAISED AERIAL PEDESTAL
9. 1500 GPM HIGH FLOW WATERWAY
10. NO LIMITED RETRACTION

REV	DATE	BY	CH
V	11FEB19	TKA	THS

CHASSIS DATA — MAKE: PIERCE — MODEL: ENFORCER

TITLE: 107' ASCENDANT AERIAL LADDER AND BODY ASSEMBLY
-

FOR: PIERCE FIELD UNIT
APPLETON, WI

DWG NO. 33288AD

JOB NO.	33288
SCALE	1:24
DATE	
DRAWN BY	TKA
	19NOV18
CHECKED BY	THS
	27NOV18
SHEET SIZE	D
SHEET NO.	1 OF 1

View File Created 11-FEB-2019 13:03:30