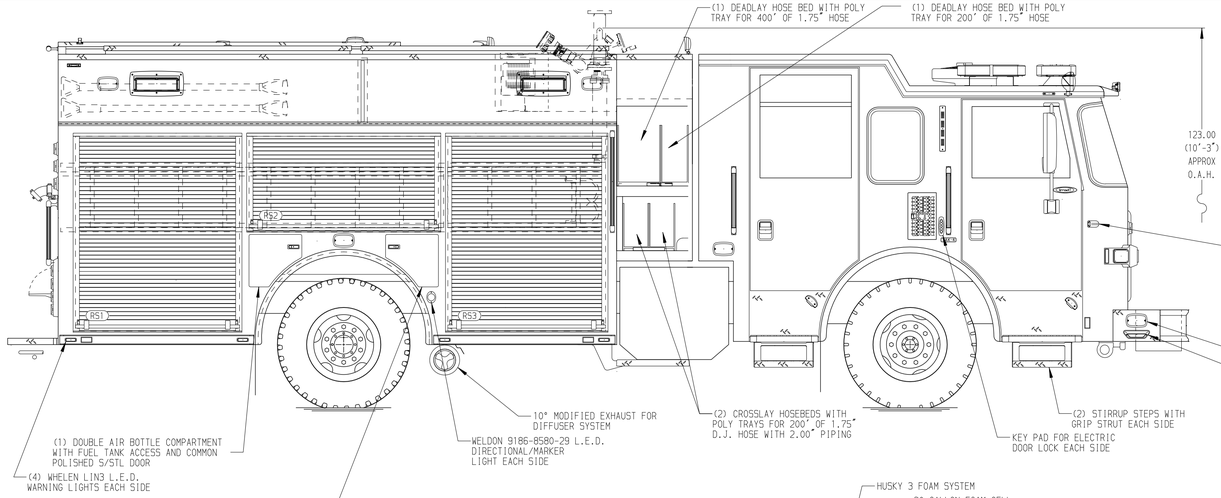

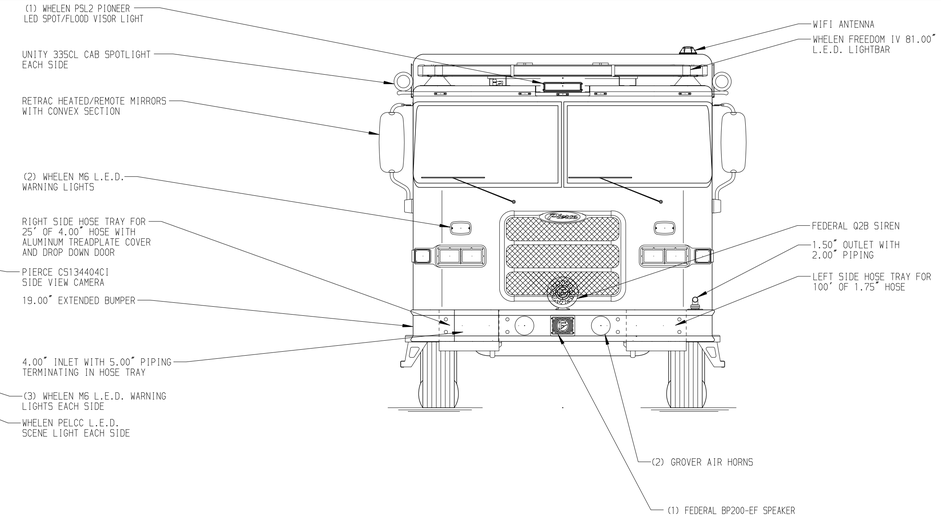

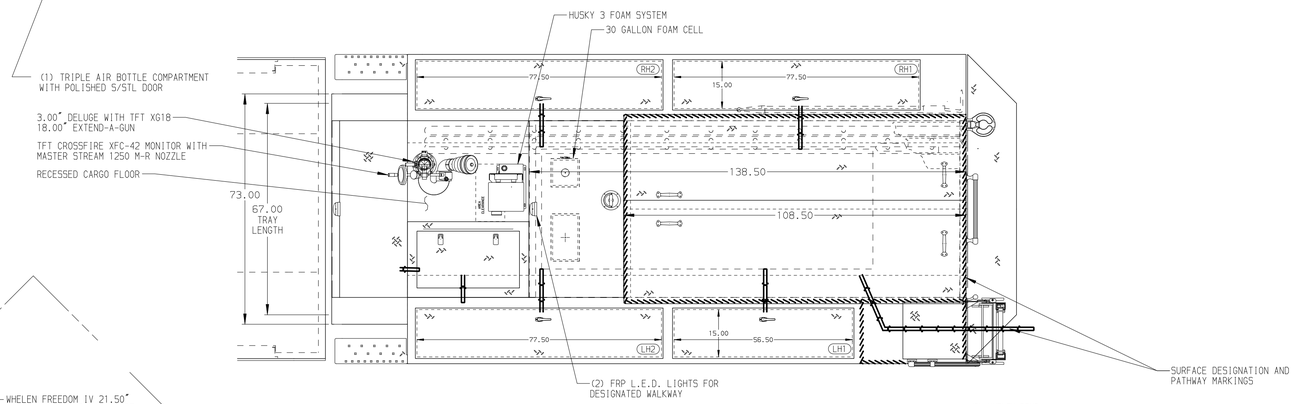

HOSEBED CAPACITIES

1. 400' OF 2.50" HOSE
2. 400' OF 2.50" HOSE
3. 800' OF 4.00" HOSE

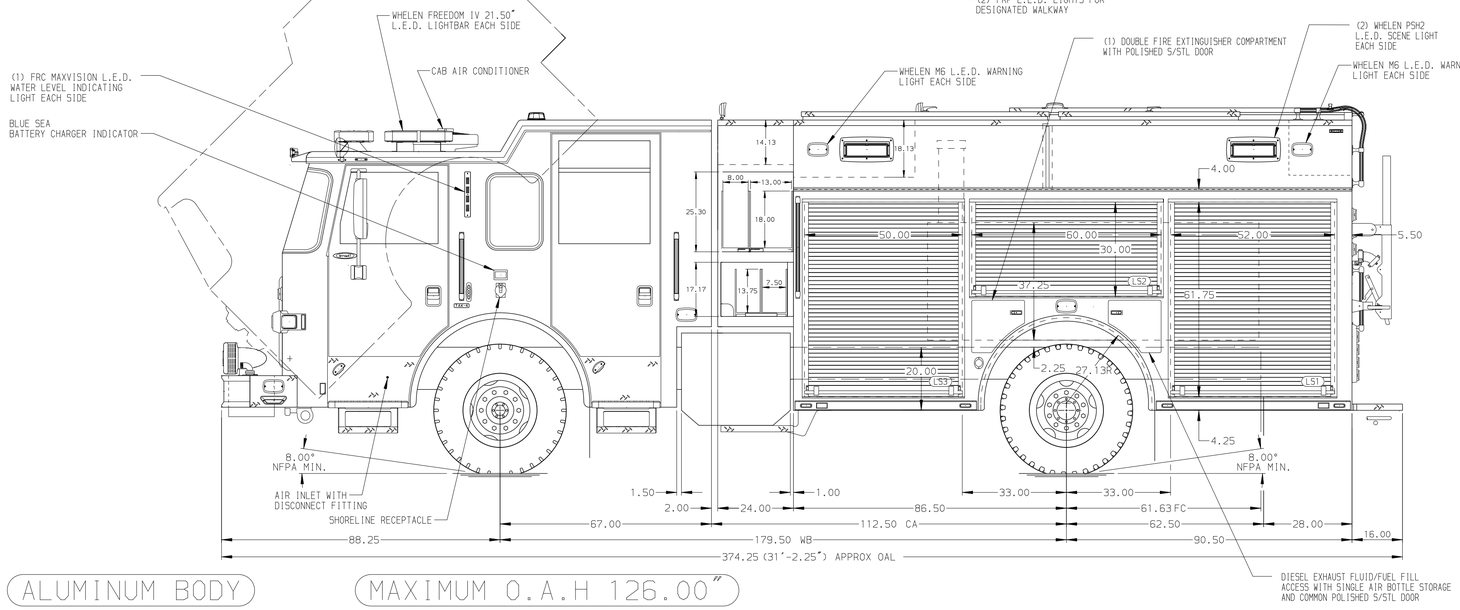

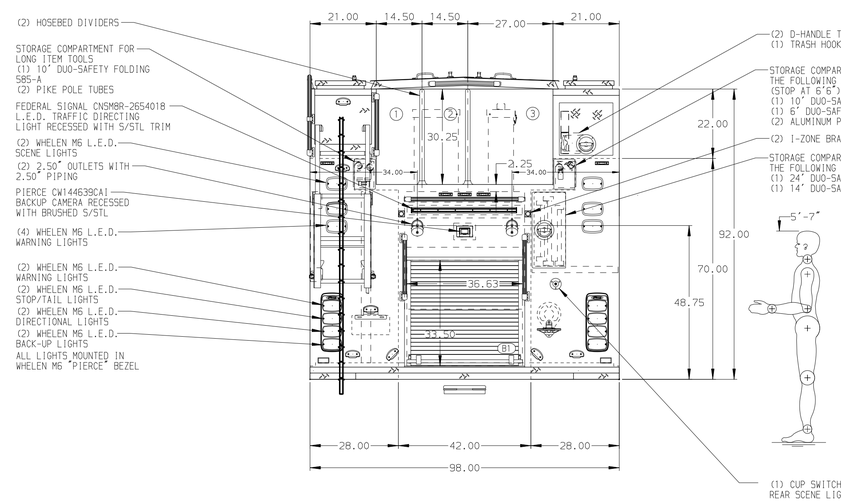

ALUMINUM BODY

MAXIMUM O.A.H 126.00"

NOTE

DIMENSIONS SHOWN ARE APPROXIMATE AND ARE SUBJECT TO MINOR DEVIATIONS AS MAY OCCUR OR BE NECESSARY IN CONSTRUCTION.
MINOR DETAILS NOT SHOWN.

1. ELECTRIC DOOR LOCKS ON COMPARTMENT LS1, LS2, RS1, RS2, RS3, & B1
2. D-HANDLE TROUGH FOR TRASH HOOK IN P5 HATCH COMPARTMENT
3. BATTERY CHARGER LOCATED IN LEFT HATCH COMPARTMENT
4. TWO FULL WIDTH/DEPTH ADJUSTABLE SHELVES WITH SIDES IN COMPARTMENT LS1, LS3 & RS3, THREE IN RS1
5. TRAY ONLY FOR FLOOR MOUNTED SLIDES IN COMPARTMENT LS1 & B1
7. ONE PARTITION BETWEEN COMPARTMENTS LS1/B1 AND RS1/B1
8. ONE SPECIAL HEIGHT VERTICAL PARTITION IN COMPARTMENT LS1 & RS3, TWO IN LS2

REV	DATE	BY	CH
7	14JUN19	KLE	KWI
6	06MAY19	AMI	RWA
5	08JAN19	KLE	KWI

CHASSIS DATA
MAKE: PIERCE
MODEL: ARROW XT

Pierce MANUFACTURING INC.

TITLE: 1500-D-500P W/30 GAL FOAM CELL,DELUGE,HUSKY 3
177 PUC RESCUE BODY,LADDERS THRU BODY

FOR: HUNTINGTON BEACH FIRE DEPARTMENT
HUNTINGTON BEACH, CALIFORNIA

DWG NO. 33292AD

JOB NO.	33292
SCALE	1:24
DATE	
DRAWN BY	AMI
DATE	18DEC18
CHECKED BY	NPE
DATE	19DEC18
SHEET SIZE	D
SHEET NO.	1 OF 1

View File Created 18-JUN-2019 15:30:34