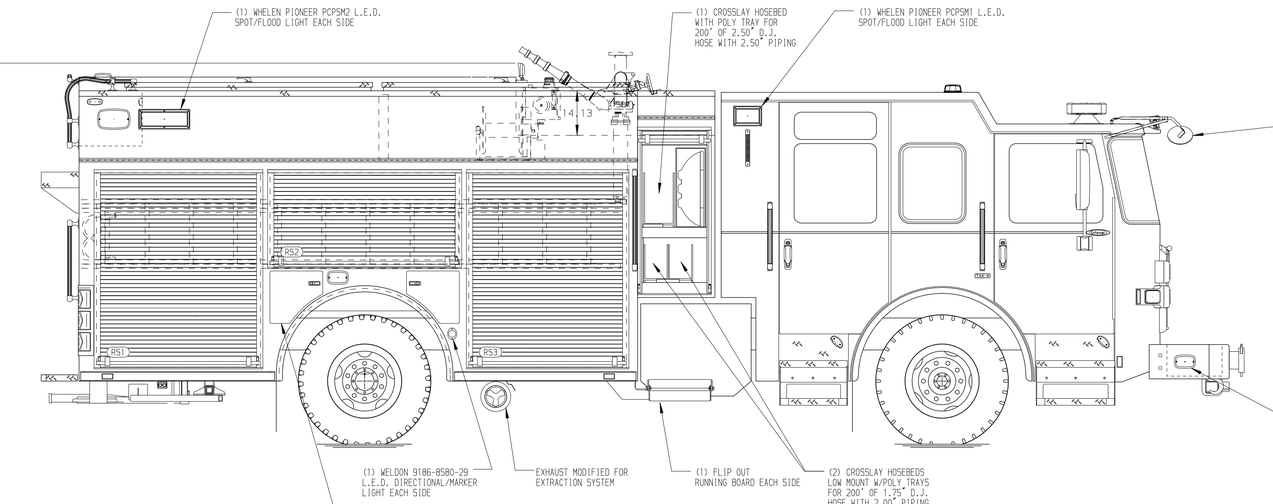

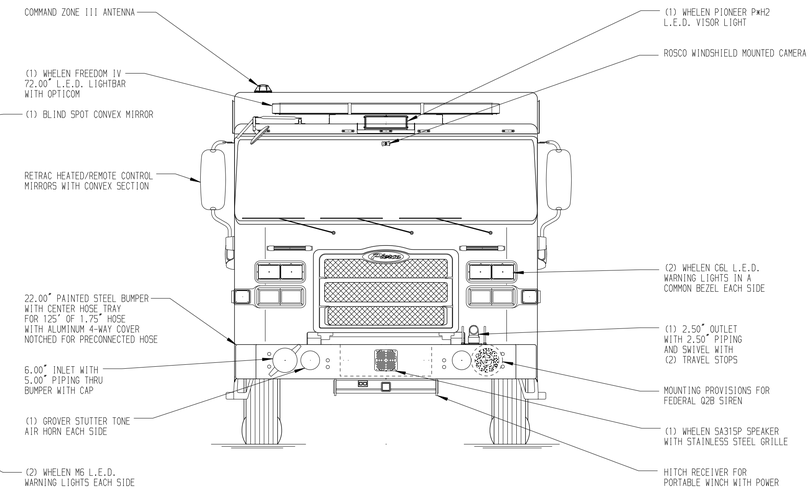

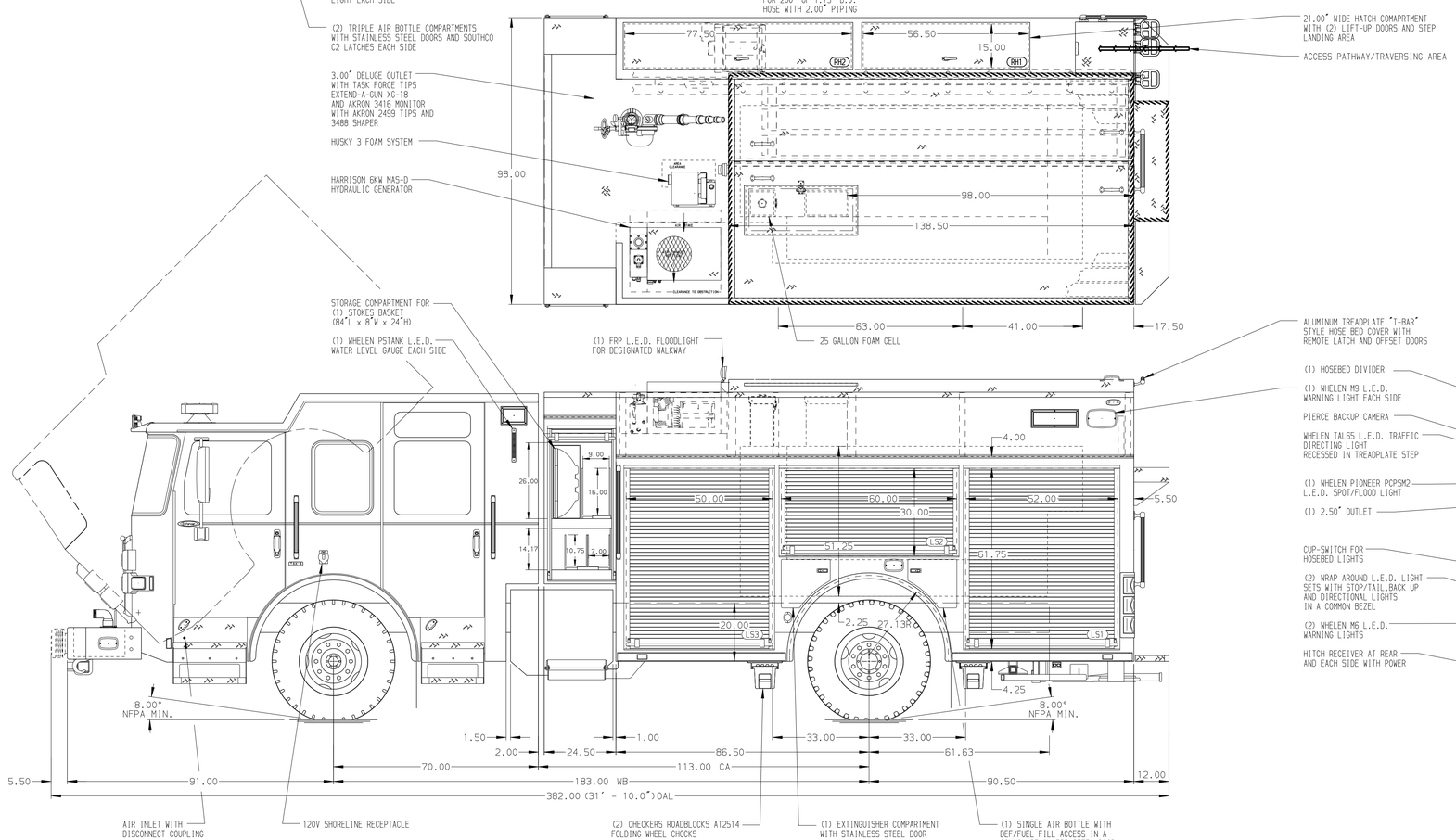

HOSEBED CAPACITIES

1 - 1000' OF 4.00" HOSE
2 - 600' OF 2.50" HOSE

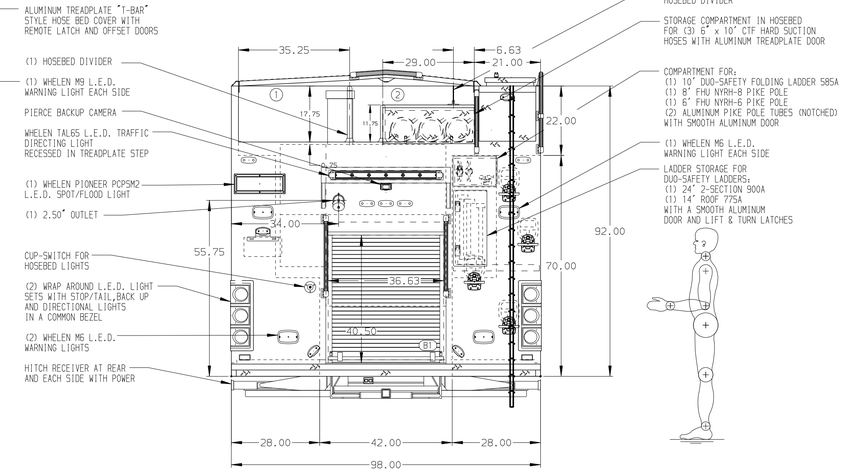

ALUMINUM BODY

SIDE ROLL AND FRONTAL IMPACT PROTECTION

NOTE

DIMENSIONS SHOWN ARE APPROXIMATE AND ARE SUBJECT TO MINOR DEVIATIONS AS MAY OCCUR OR BE NECESSARY IN CONSTRUCTION.
MINOR DETAILS NOT SHOWN.

1. RUD ROTOGRIP AUTOMATIC TIRE CHAINS
2. BATTERY CHARGER LOCATED BEHIND DRIVER'S SEAT
3. BATTERY CHARGE INDICATOR LOCATED ON DRIVER'S SEAT RISER
4. DUAL L.E.D. LIGHT STRIPS LOCATED IN HOSE BED
5. ONE FULL WIDTH/DEPTH ADJUSTABLE SHELF IN COMPARTMENT RS2, TWO IN LS1, LS3, RS3 & B1, THREE IN RS1
6. ONE ADJUSTABLE SLIDE-OUT TRAY IN COMPARTMENT RS3
7. ONE FLOOR MOUNTED SLIDE-OUT TRAY IN COMPARTMENT RS3
8. ONE SWING-OUT ALUMINUM TOOL BOARD IN COMPARTMENT LS2
9. TWO ADDITIONAL POLY TRAYS SHIPPED LOOSE
10. CIRCUIT BREAKER PANEL IN COMPARTMENT LS3
11. ONE AKRON ELECTRIC REWIND CORD REEL LOCATED IN RH2 ABOVE COMPARTMENT RS3 WITH CAPACITY FOR 200' OF 10/3 CABLE (MODEL:ERWC-15-10)
12. ONE VERTICAL PARTITION IN COMPARTMENT RS1 & RS3
13. 6-SLOT AIR BAG RACK INSIDE COMPARTMENT RS3

REV	DATE	BY	CH
V	06MAR19	AMI	JGO

CHASSIS DATA
MAKE: PIERCE
MODEL: ENFORCER

Pierce MANUFACTURING INC.

TITLE: 1500-D-1000P W/25G FOAM CELL, 177" PUMPER PUC BODY (3)HSH'S,(3)XLAYS, DELUGE, GENERATOR, HUSKY 3
FOR: DERRY FIRE DEPARTMENT, DERRY, NEW HAMPSHIRE
DWG NO.: 33322AD

JOB NO.	33322
SCALE	1:24
DATE	
DRAWN BY	AMI
DATE	30NOV18
CHECKED BY	NPA
DATE	30NOV18
SHEET SIZE	D
SHEET NO.	1 OF 1

View File Created 07-MAR-2019 08:01:15