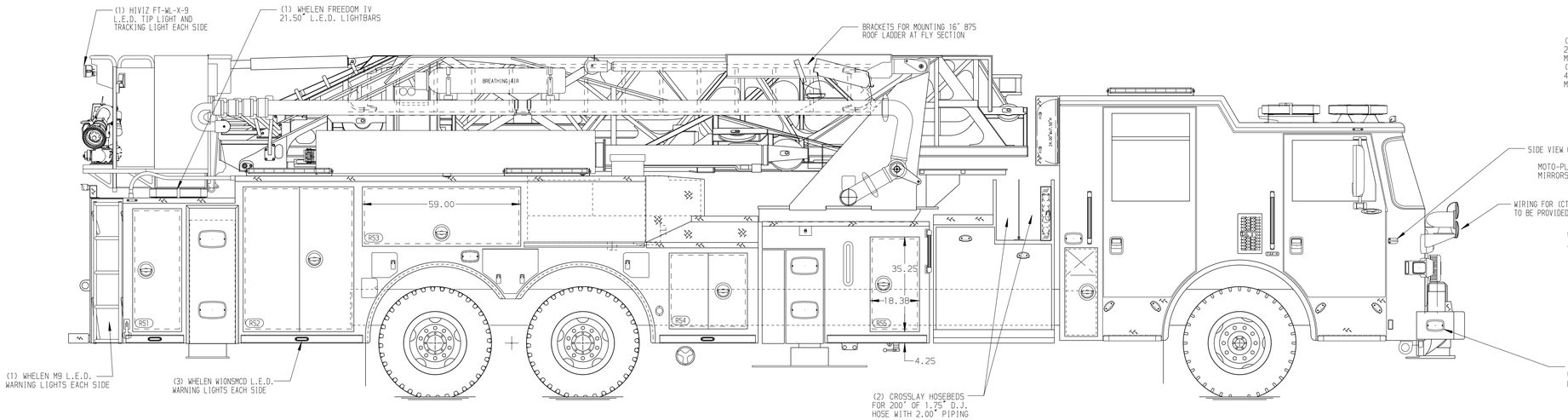

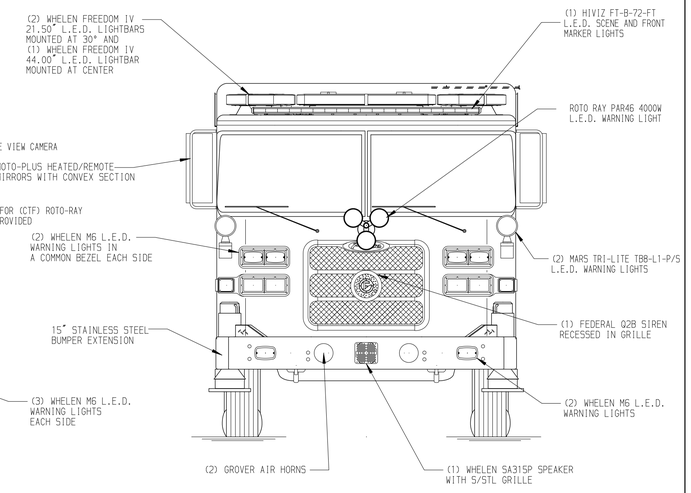

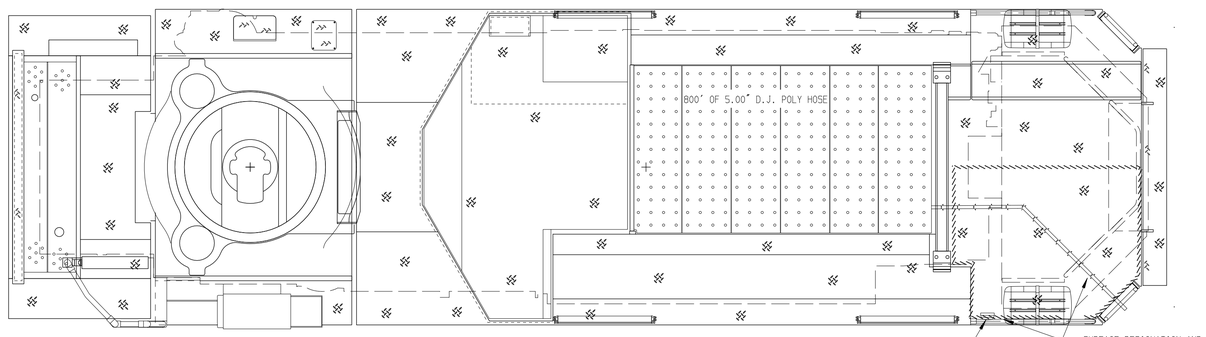

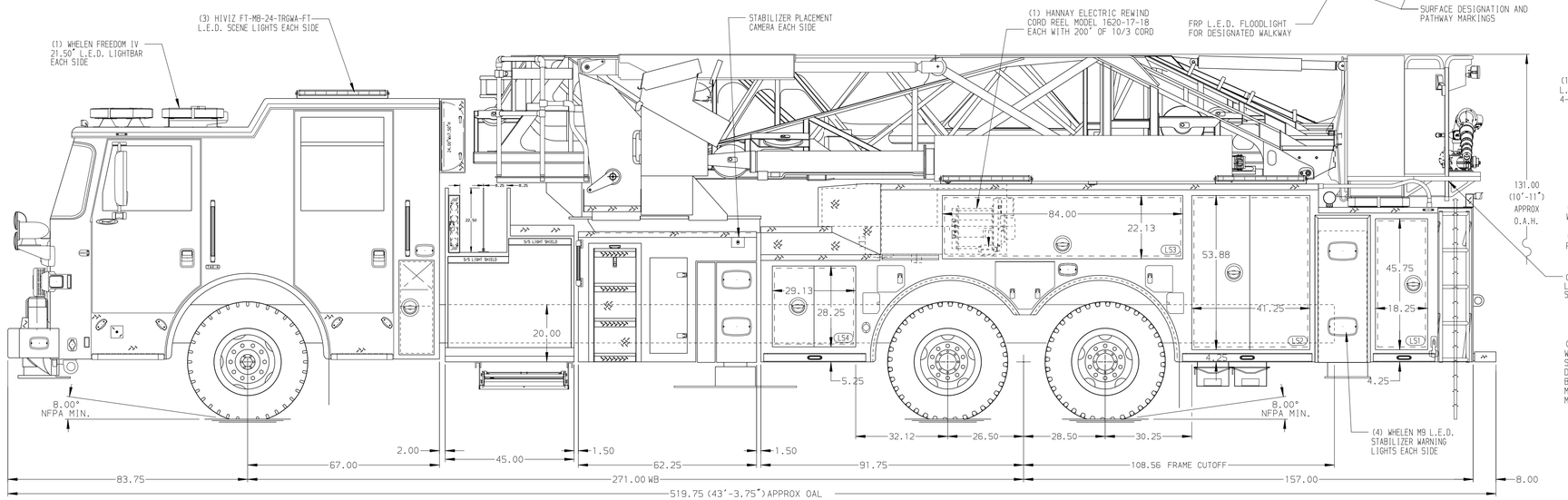

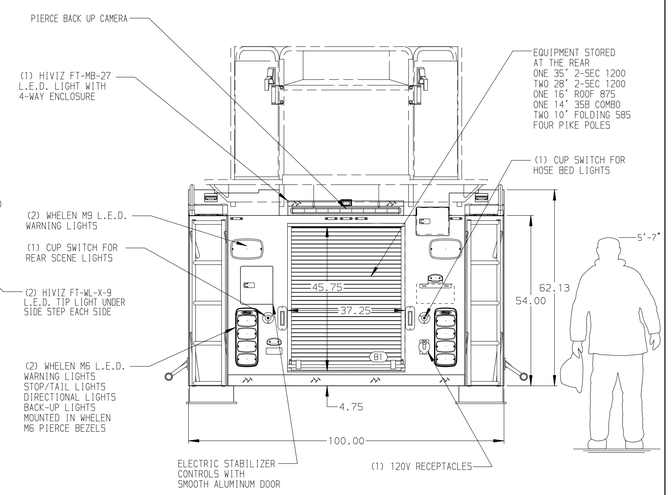

ALUMINUM BODY

SIDE ROLL AND FRONTAL IMPACT PROTECTION

NOTE

DIMENSIONS SHOWN ARE APPROXIMATE AND ARE SUBJECT TO MINOR DEVIATIONS AS MAY OCCUR OR BE NECESSARY IN CONSTRUCTION.
MINOR DETAILS NOT SHOWN.

1. SHORELINE RECEPTACLE WITH KUSSMAUL SUPER AUTO-EJECT LOCATED ON DRIVER SIDE OF THE CAB
2. AIR INLET WITH DISCONNECT COUPLING IN A RECESSED BOX IN THE DRIVER SIDE STEPWELL
3. BATTERY CHARGER LOCATED BEHINED DRIVERS SEAT
4. BATTERY CHARGE INDICATOR LOCATED NEAR DRIVER SEAT RISER WITH BRACKET
5. FOUR ADJUSTABLE SHELVES IN COMPARTMENTS PER SHOP ORDER
6. NON-RAISED AERIAL PEDESTAL
7. 3-in-1 LYFECOMBO BRACKETS AT AERIAL BASKET
8. VOGEL LUBE SYSTEM LOCATED PER SHOP ORDER
9. ALUMINUM ROOF FOR THE CAB
10. FOUR FLOOR MOUNTED SLIDE-OUT TRAYS IN COMPARTMENTS PER SHOP ORDER
11. TWO SWING-OUT TOOLBOARDS LOCATED PER SHOP ORDER
12. TWO SLIDE-OUT TRAYS LOCATED PER SHOP ORDER
13. ONE CTECH DRAWER ASSEMBLY SHIPPED LOOSE
14. HARRISON GENERATOR MID 10.0 LOCATED PER SHOP ORDER
15. TWO HANNAY 1618-17-16 CORD REELS LOCATED PER SHOP ORDER
16. CIRCUIT BREAKER LOCATED PER SHOP ORDER
17. FOUR RECEPTACLES LOCATED PER SHOP ORDER
18. THREE RECEPTACLES LOCATED ON BODY PER SHOP ORDER
19. 3-WAY INTERCOM SYSTEM
20. WIRELESS CAMER SYSTEM ON PLATFORM TO PEDESTAL
21. AIR OUTLET LOCATED ON DS PUMP PANEL
22. TWO TILT/SLIDE-OUT TRAYS LOCATED PER SHOP ORDER
23. ONE VERTICAL DIVIDER LOCATED PER SHOP ORDER
24. FOUR PACK TRAC LOCATED PER SHOP ORDER

REV	DATE	BY	CH
7	20AUG19	LWE	PJP
6	18JULY19	LWE	PJP
5	20MAY19	LWE	NDA

CHASSIS DATA
MAKE: PIERCE
MODEL: ARROW XT

Pierce MANUFACTURING INC.

TITLE: 100' ASCENDANT AERIAL TOWER AND BODY ASSEMBLY
300 GALLON WATER TANK

FOR: NIH BETHESDA
NIH BETHESDA, MD

DWG NO. 33366AD

JOB NO.	33366
SCALE 1:24	DATE
DRAWN BY LWE	16MAY19
CHECKED BY CRI	16MAY19
SHEET SIZE D	SHEET NO. 1 OF 1

View File Created 26-AUG-2019 09:01:51