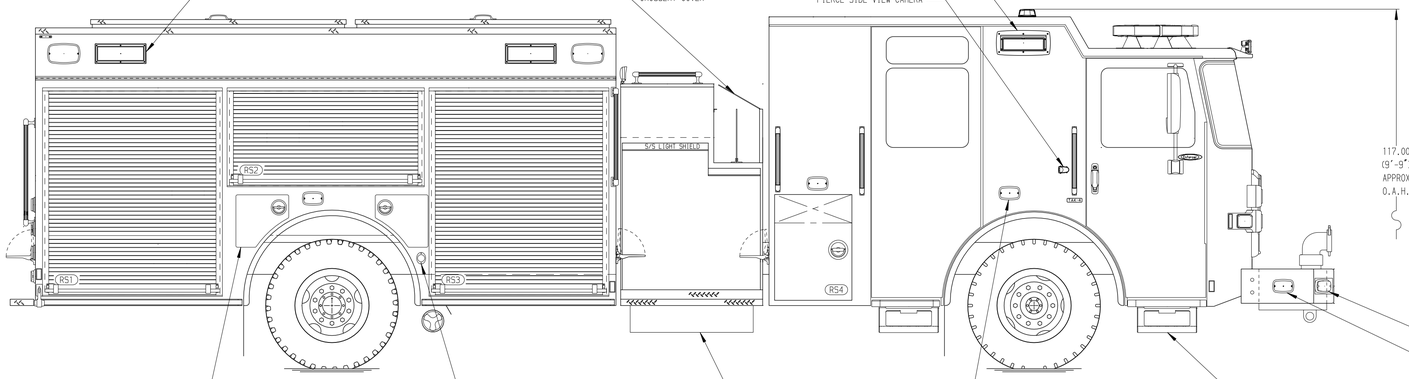

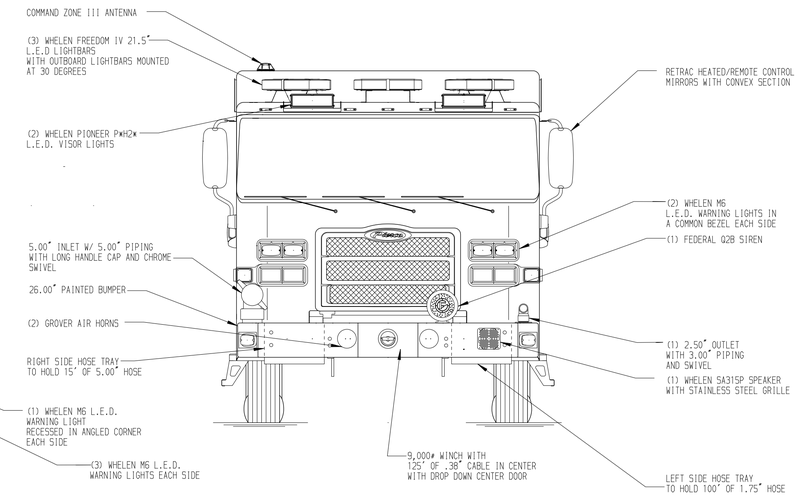

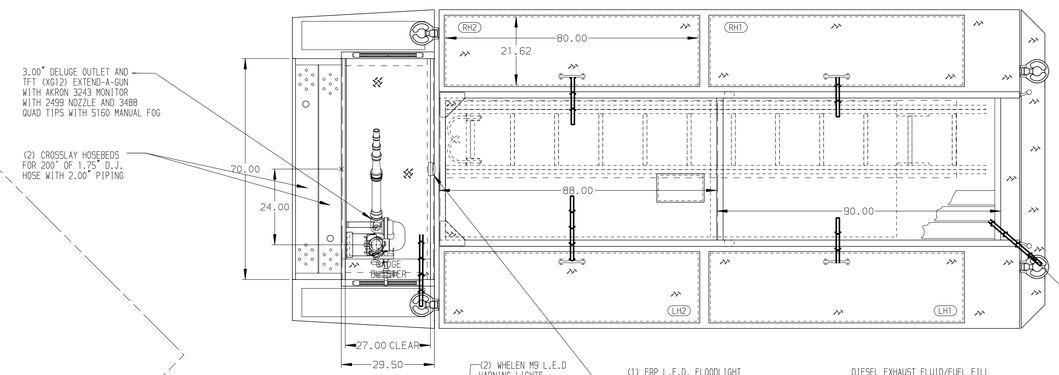

HOSEBED CAPACITIES

1. 600' OF 2.50" HOSE
2. 700' OF 5.00" HOSE
3. 300' OF 2.50" HOSE (BOTTOM)
   300' OF 1.75" HOSE (TOP)

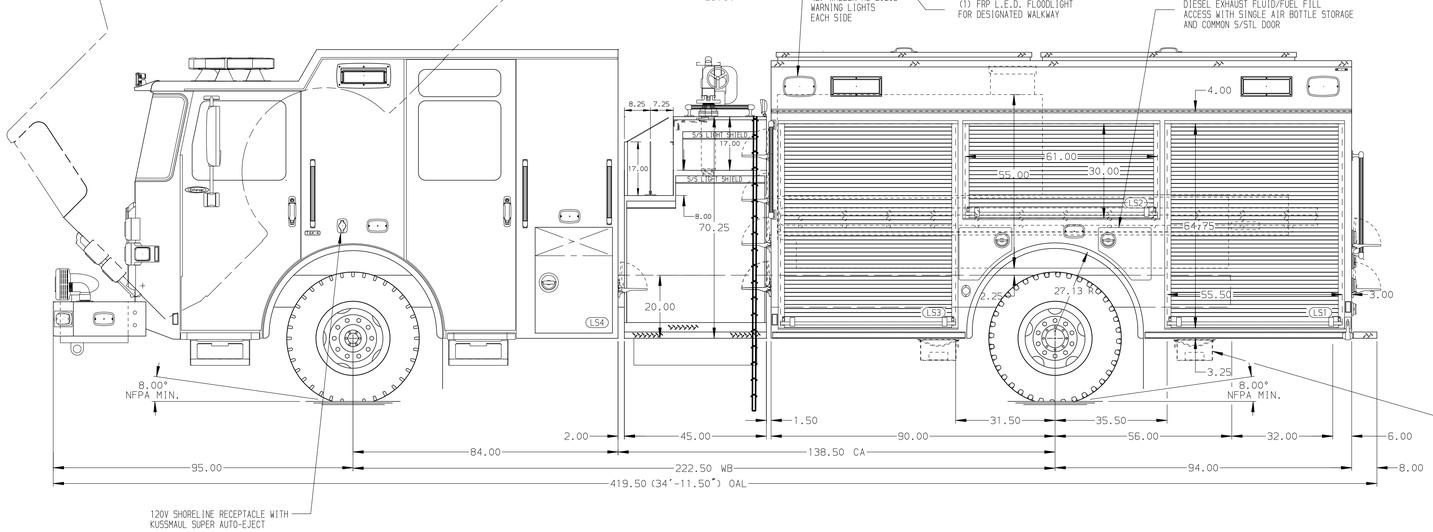

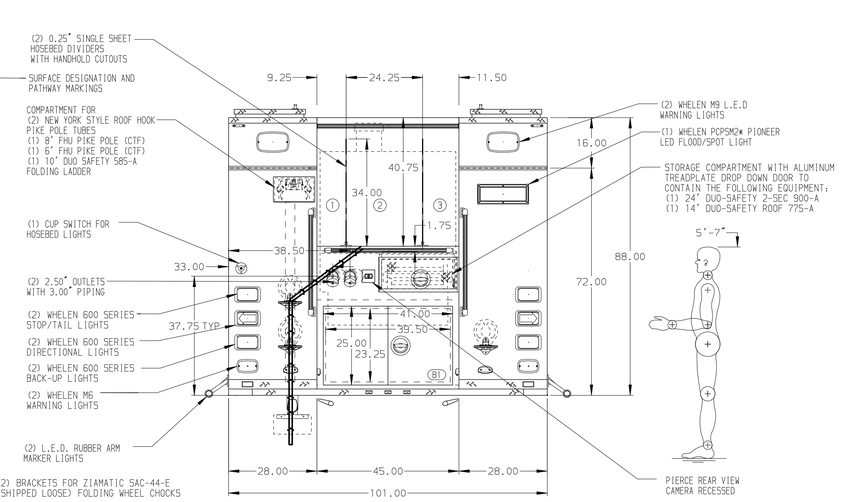

ALUMINUM BODY

MAXIMUM O.A.H. 118.00"

FRONTAL IMPACT PROTECTION

NOTE

DIMENSIONS SHOWN ARE APPROXIMATE AND ARE SUBJECT TO MINOR DEVIATIONS AS MAY OCCUR OR BE NECESSARY IN CONSTRUCTION.
MINOR DETAILS NOT SHOWN.

1. BATTERY CHARGE INDICATOR LOCATED ON DRIVER'S SEAT RISER
2. DUAL L.E.D. LIGHT STRIPS LOCATED IN HOSE BED

REV	DATE	BY	CH
3	02APR19	LST	CSH
2	14MAR19	LST	CSH
1	17JAN19	LST	AZA

CHASSIS DATA
MAKE: PIERCE
MODEL: ENFORCER

Pierce MANUFACTURING INC.

TITLE: 2000-D-750P 184" HDRP BODY, LADDER TUNNEL THRU TANK (2)REAR OUTLETS, (2) XLAYS, DELUGE

FOR: DEER PARK FIRE DISTRICT, DEER PARK, NEW YORK

DWG NO.: 33383AD-SH1

JOB NO.	33383
SCALE	1:24
DATE	
DRAWN BY	LST 02JAN19
CHECKED BY	AZA 08JAN19
SHEET SIZE	D
SHEET NO.	1 OF 2

View File Created 02-APR-2019 13:48:04