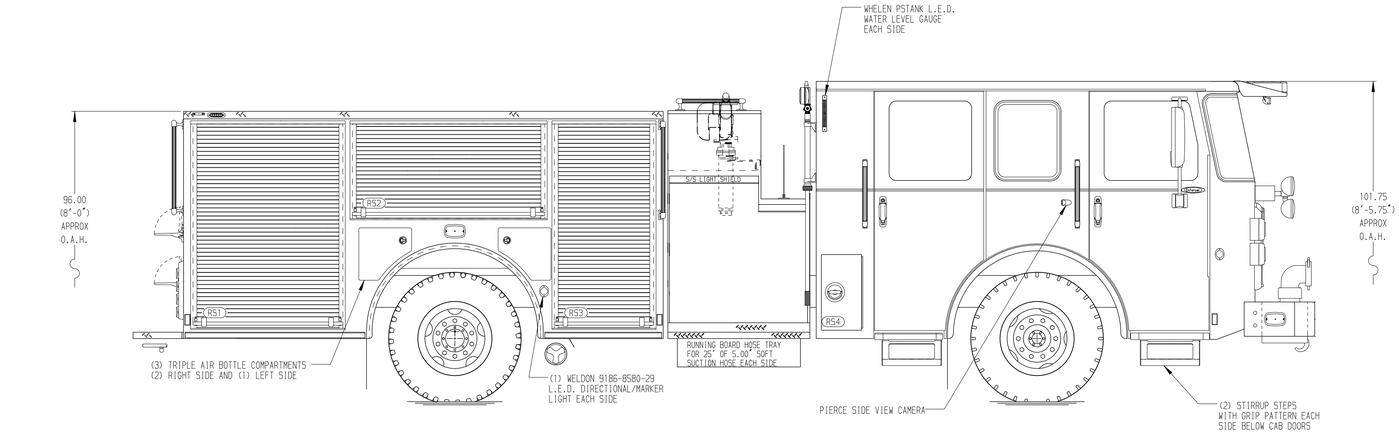

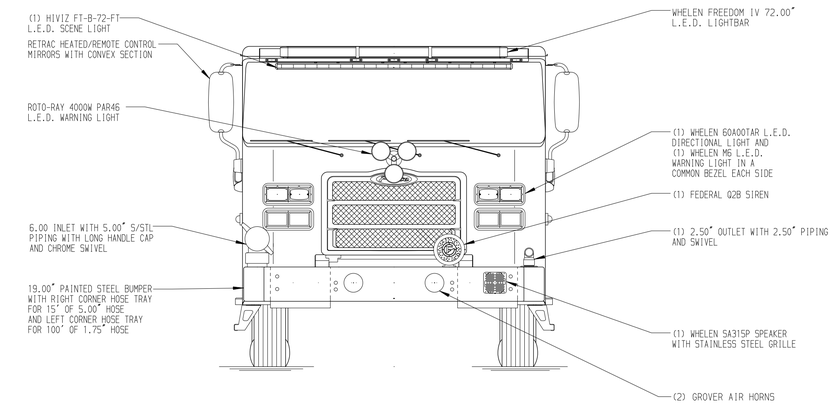

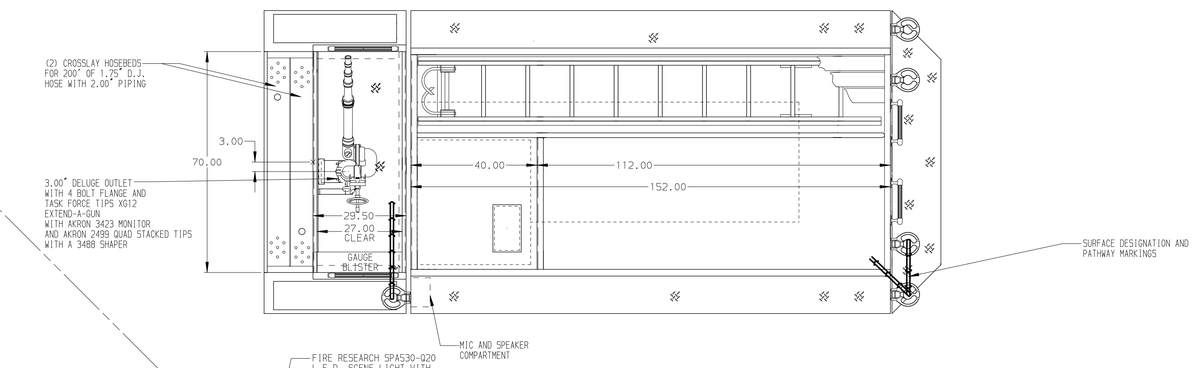

HOSEBED CAPACITIES

1. 1000' OF 5.00" HOSE
2. 500' OF 2.50" HOSE
3. 700' OF 1.75" HOSE

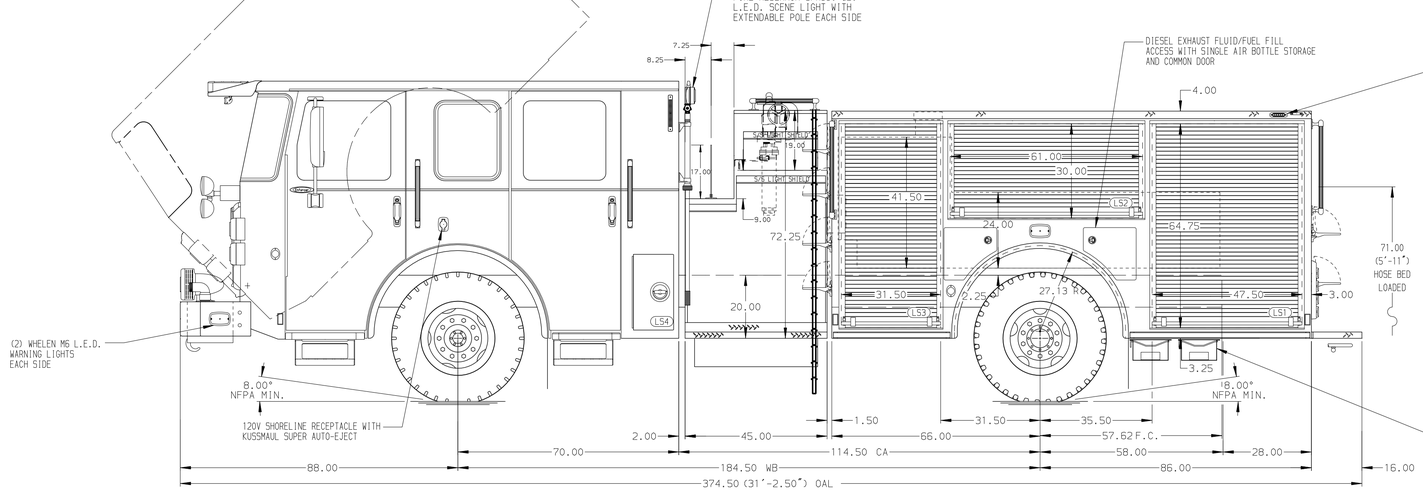

ALUMINUM BODY

MAXIMUM O.A.H. 105.00"

FRONTAL IMPACT PROTECTION

NOTE

DIMENSIONS SHOWN ARE APPROXIMATE AND ARE SUBJECT TO MINOR DEVIATIONS AS MAY OCCUR OR BE NECESSARY IN CONSTRUCTION.
MINOR DETAILS NOT SHOWN.

1. AIR INLET/OUTLET WITH DISCONNECT FITTING ON D.S. STEP WELL
2. BATTERY CHARGER LOCATED BEHIND DRIVER'S SEAT
3. BATTERY CHARGER INDICATOR LOCATED ON DRIVER'S SEAT RISER
4. DUAL L.E.D. LIGHT STRIPS LOCATED IN HOSE BED
5. DRIP PAN GUARD FOR ROLL-UP DOOR IN LS1, LS2, LS3, RS1, RS2, AND RS3
6. ADJUSTABLE FULL WIDTH/ DEPTH SHELVES TWO IN LS1, LS3, RS1, AND RS3 AND ONE IN B1 AND RS2
7. ONE ADJUSTABLE 2-WAY SLIDE-OUT TRAY WITH 4" SIDES IN LS1 AND RS1 THRU B1
8. SWING-OUT TOOL BOARD WITH PEGBOARD PATTERN IN LS2
9. GROVER "TRAIN HORN" UNDER THE BUMPER
10. ONE FLOOR MOUNTED SLIDE-OUT TRAY IN LS1, LS3, RS1, AND RS3
11. COMMAND ZONE III ANTENNA MOUNTED ON THE PASSENGERS SIDE OF THE CAB

REV	DATE	BY	CH
V	29MAR19	LST	CSH
B	07MAR19	LST	CSH
A	23JAN19	LST	AZA

CHASSIS DATA
MAKE: PIERCE
MODEL: ENFORCER
DWG NO.: 33401AD

Pierce MANUFACTURING INC.

TITLE: 1500-D-500 GAL POLY, 152" FH FDLER
LADDERS IN THE HOSEBED, (2) X-LAYS, DELUGE

FOR: GREENPORT FIRE DEPARTMENT
GREENPORT, NEW YORK

JOB NO.	SCALE	DRAWN BY	CHECKED BY	SHEET SIZE	SHEET NO.
33401	1:24	LST	AZA	D	1 OF 1

DATE: 04JAN19
DATE: 10JAN19

View File Created 01-APR-2019 09:24:31