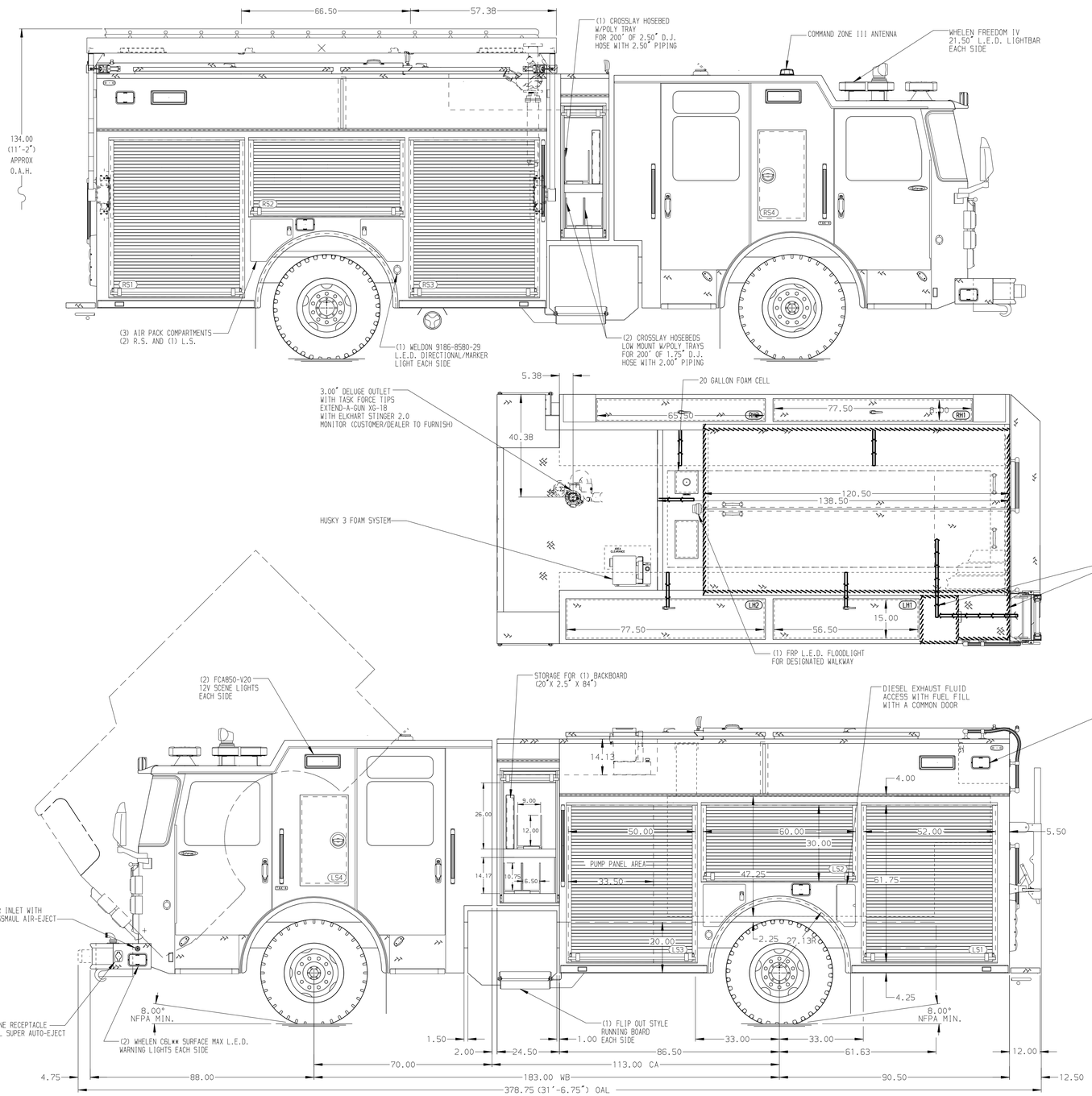

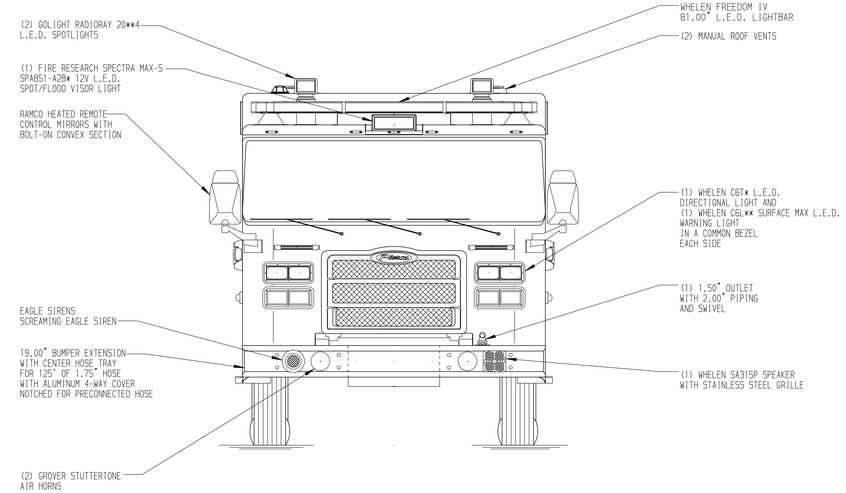

HOSEBED CAPACITIES

1. 100' OF 1.75" HOSE ON A SHELF ON TOP OF 100' OF 1.75" HOSE
2. 400' OF 2.50" HOSE
3. 1000' OF 5.00" HOSE
4. 600' OF 3.00" HOSE

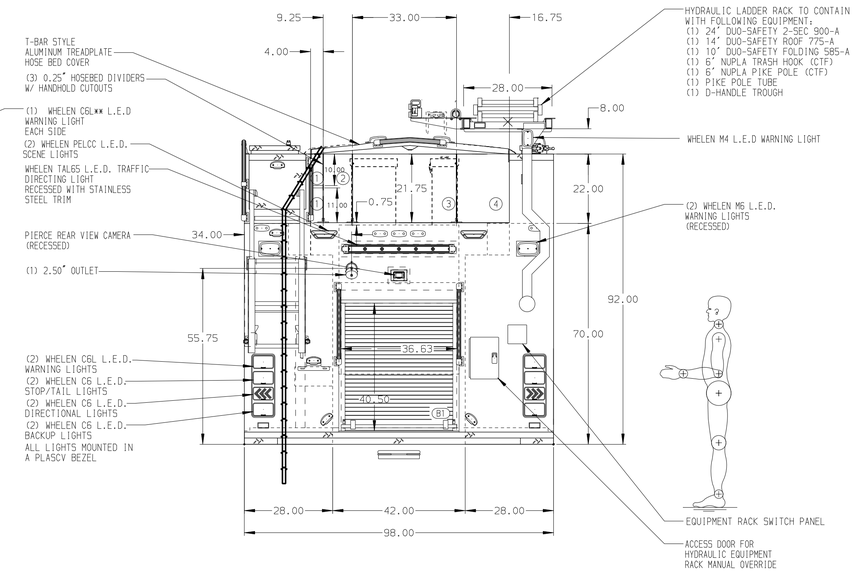

ALUMINUM BODY

NOTE

DIMENSIONS SHOWN ARE APPROXIMATE AND ARE SUBJECT TO MINOR DEVIATIONS AS MAY OCCUR OR BE NECESSARY IN CONSTRUCTION.
MINOR DETAILS NOT SHOWN.

1. ONSPOT AUTOMATIC TIRE CHAINS TO BE PROVIDED AT THE REAR
2. WHEEL CHOCKS AND BRACKETS (CTF)
3. BATTERY CHARGER LOCATED IN LS3
4. BATTERY CHARGER INDICATOR LOCATED ON DRIVER'S SEAT RISER
5. DUAL L.E.D. LIGHT STRIPS LOCATED IN HOSE BED
6. FULL WIDTH/DEPTH ADJUSTABLE SHELVES THREE IN RS1 AND RS3 TWO IN LS1 AND ONE IN B1, LS2, AND LS3
7. ONE FLOOR MOUNTED SLIDE-OUT TRAY IN LS1
8. TWO ADJUSTABLE SLIDE-OUT TRAYS IN LS3
9. ONE 12VDC ROADPRO 300 WATT ELECTRIC HEATER IN RS1
10. TRANSVERSE PARTITION IN COMPARTMENT-RS1/B1
11. ONE TILT/ SLIDE-OUT TRAY IN LS3
12. TWO SLIDE-OUT TOOLBOARDS WITH PAC TRAC IN RS3
13. PAC TRAC INSTALLED ON THE BACK WALL OF RS2
14. VERTICAL PARTITION IN RS3
15. ONE 120V NEMA DUPLEX RECEPTACLE IN LS1

REV	DATE	BY	CH
1	08APR19	MWA	SMA
2	13MAR19	LST	JJR
3	23JAN19	LST	SMA

CHASSIS DATA
MAKE: PIERCE
MODEL: ENFORCER

Pierce MANUFACTURING INC.

TITLE: 1500-D-770P, 750 GAL OF WATER W/ 20 GAL FOAM CELL 177" PUC RESCUE, HYDRAULIC LADDER RACK, (3) X-LAYS

FOR: RENO FIRE DEPARTMENT
RENO, NEVADA

DWG NO.: 33407AD

JOB NO.	33407 01-02
SCALE	1:24
DATE	
DRAWN BY	LST 03JAN19
CHECKED BY	SMA 10JAN19
SHEET SIZE	D
SHEET NO.	1 OF 1

View File Created 09-APR-2019 13:02:39