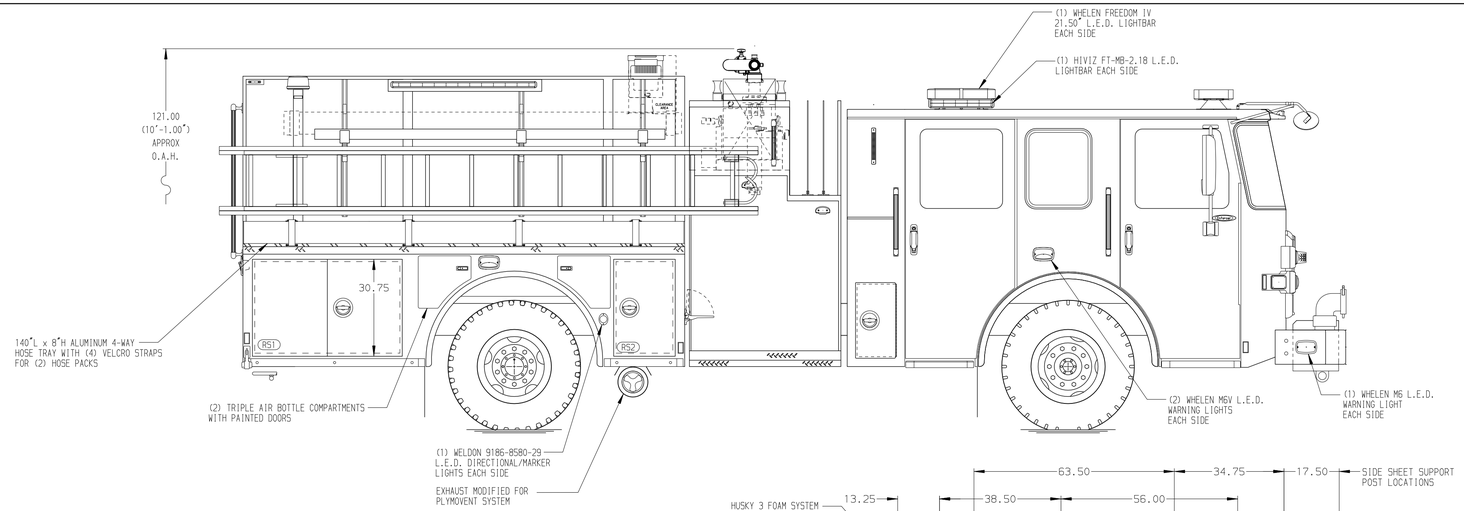

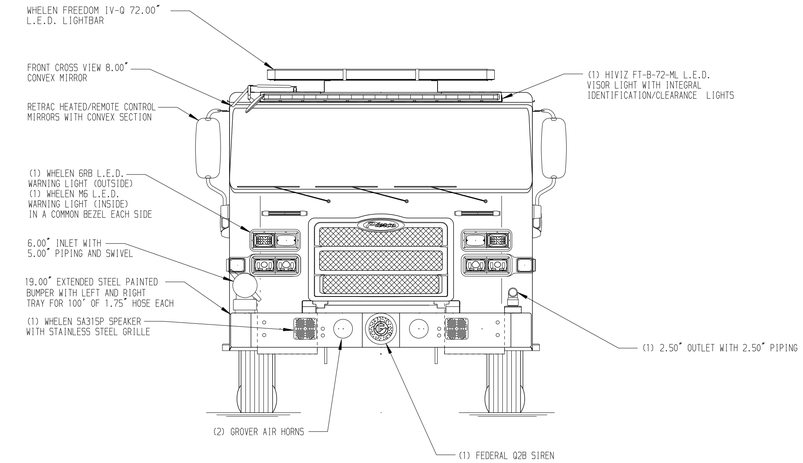

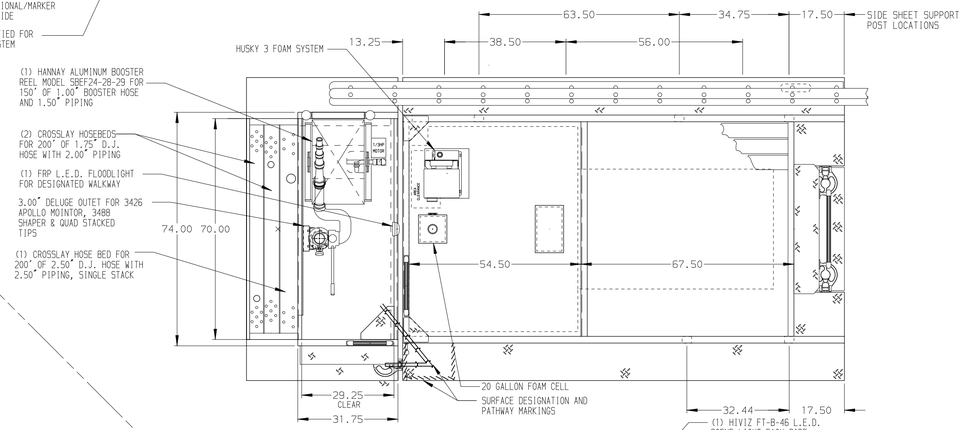

HOSEBED CAPACITIES

1. 200' OF 1.75" D.J. HOSE
2. 200' OF 2.50" D.J. HOSE
3. 1000' OF 5.00" D.J. HOSE
4. 200' OF 2.50" D.J. HOSE
5. 200' OF 1.75" D.J. HOSE

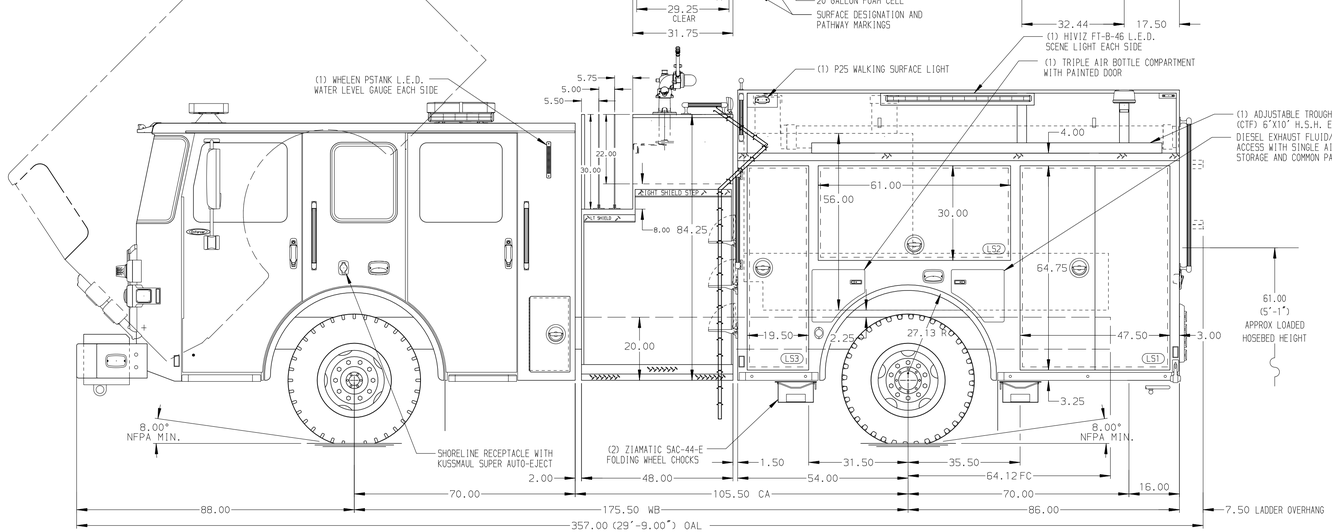

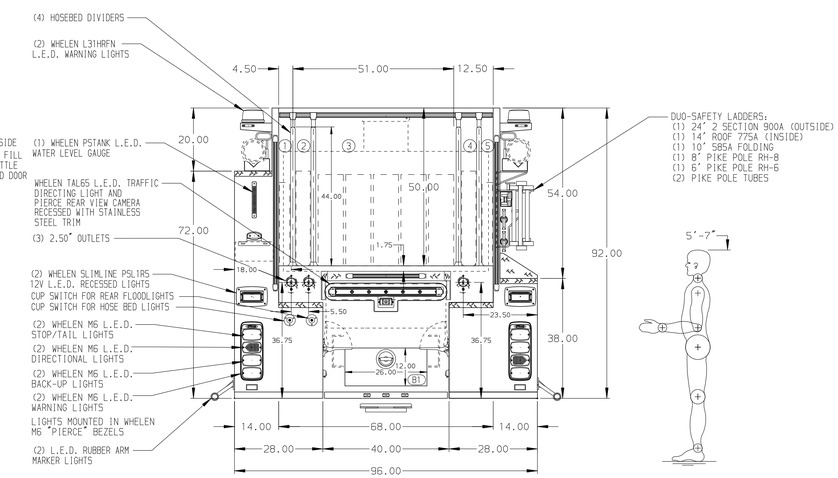

ALUMINUM BODY

SIDE ROLL AND FRONTAL IMPACT PROTECTION

NOTE

DIMENSIONS SHOWN ARE APPROXIMATE AND ARE SUBJECT TO MINOR DEVIATIONS AS MAY OCCUR OR BE NECESSARY IN CONSTRUCTION.
MINOR DETAILS NOT SHOWN.

1. BATTERY CHARGER LOCATED BEHIND OFFICER'S SEAT
2. BATTERY CHARGE INDICATOR LOCATED ON DRIVER'S SEAT RISER
3. DUAL L.E.D. LIGHT STRIPS LOCATED IN HOSE BED
4. REVERSED HINGED DOOR ON COMPARTMENT LS3
5. ONE ALUMINUM PEGBOARD/TOOLBOARD ON THE BACK WALL OF COMPARTMENT LS1, LS3
6. ONE SLIDE OUT FLOOR MOUNTED TRAY IN COMPARTMENT RS1
7. AIR INLET WITH DISCONNECT COUPLING AT THE DRIVER'S SIDE STEPWELL
8. ONE FULL WIDTH/DEPTH ADJUSTABLE SHELF IN COMPARTMENT RS2, AND TWO EACH IN LS1, LS3
9. ONE ADJUSTABLE HEIGHT SLIDE OUT TRAY IN COMPARTMENT RS1
10. ONE FLOOR MOUNTED SLIDE OUT TRAY WITH 2.00" SIDES IN COMPARTMENT RS1
11. ONE SWING OUT ALUIMINUM PEGBOARD TOOLBOARD IN COMPARTMENT LS2
12. ONE DEPLEX RECEPTACLE IN COMPARTMENT LS3, RS2

REV	DATE	BY	CH
5	07AUG19	MWA	-
4	17APR19	MWA	DTS
3	15MAR19	MWA	DTS
2	24JAN19	MWA	NPA

CHASSIS DATA — MAKE: PIERCE — MODEL: ENFORCER

Pierce MANUFACTURING INC.

TITLE: 2000-D-770P, 750G WTR, 20 FOAM, 140" FULL HEIGHT/LOW (2) CROSSLAYS, DELUGE, GENERATOR, BOOSTER REEL

FOR: CRANBERRY TOWNSHIP V.F.C.
CRANBERRY TOWNSHIP, PENNSYLVANIA

DWG NO.: 33412AD

JOB NO.	SCALE	DRAWN BY	CHECKED BY	SHEET SIZE	SHEET NO.
33412 (01-02)	1:24	MWA	NPA	D	1 OF 1

DATE: 18JAN19 (DRAWN BY) — 18JAN19 (CHECKED BY)

View File Created 07-AUG-2019 11:57:40