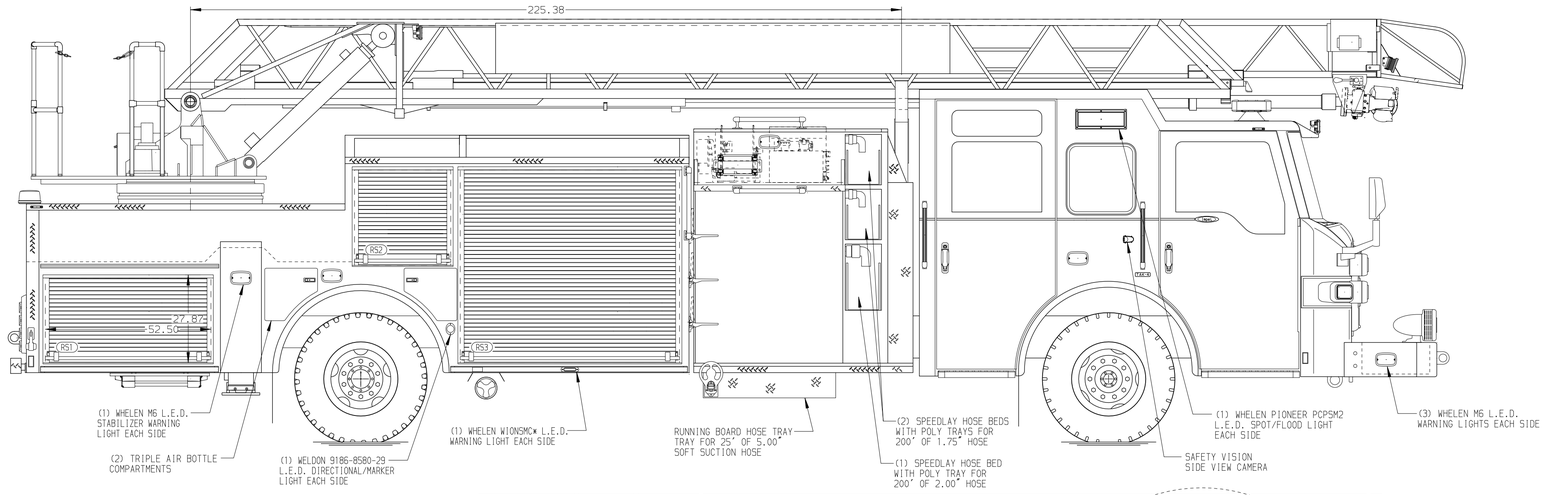


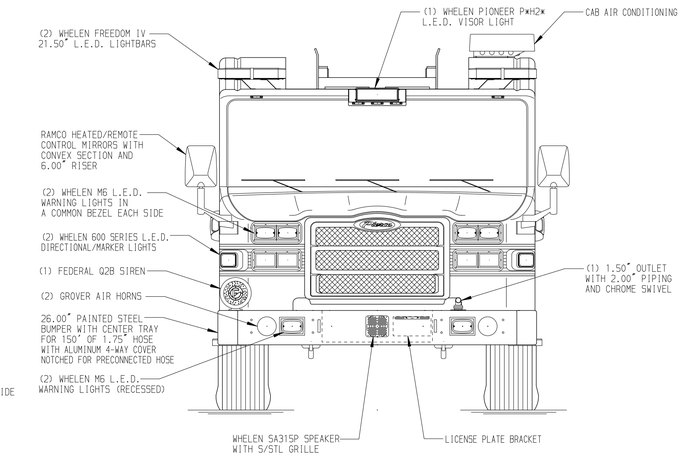


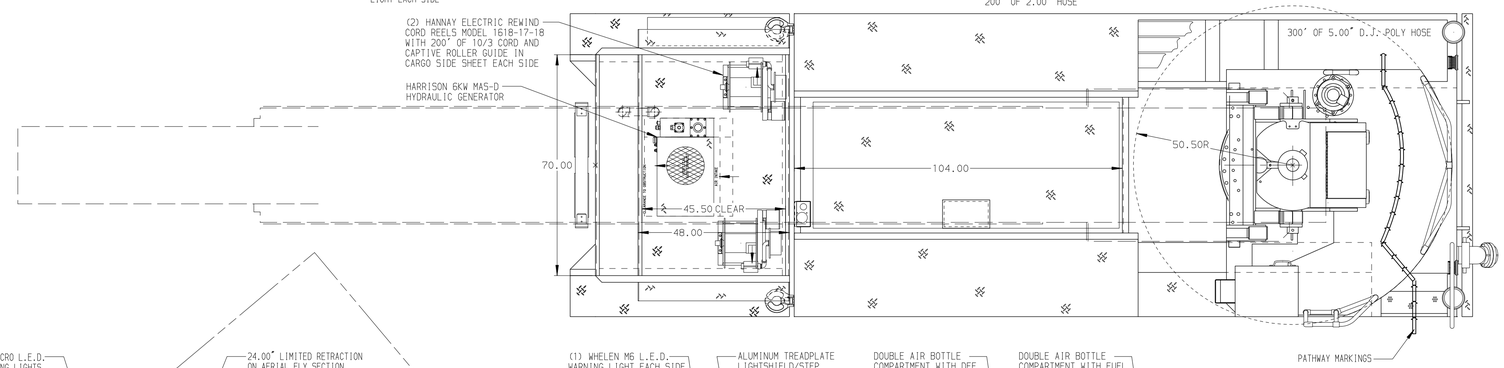


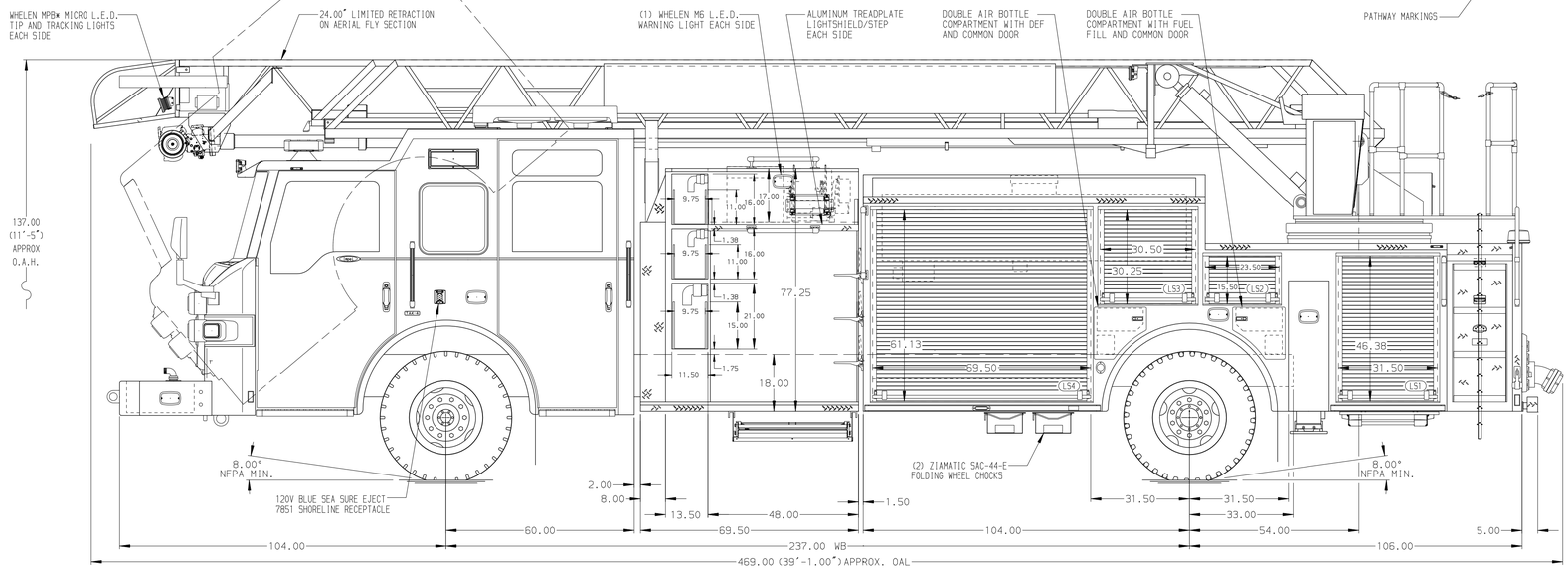


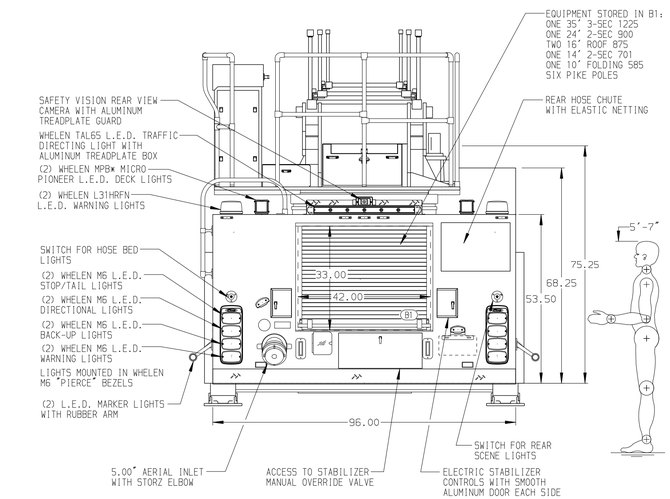


ALUMINUM BODY

SIDE ROLL AND FRONTAL IMPACT PROTECTION

NOTE

DIMENSIONS SHOWN ARE APPROXIMATE AND ARE SUBJECT TO MINOR DEVIATIONS AS MAY OCCUR OR BE NECESSARY IN CONSTRUCTION.
MINOR DETAILS NOT SHOWN.

1. AIR INLET WITH DISCONNECT COUPLING LOCATED AT DRIVER'S SIDE PUMP PANEL
2. BATTERY CHARGER LOCATED BEHIND DRIVER SEAT
3. BATTERY CHARGE INDICATOR LOCATED NEAR DRIVER'S SEAT RISER WITH BRACKET
4. ONE ADJUSTABLE FULL WIDTH/FULL DEPTH SHELF IN COMPARTMENTS LS1,LS4,RS3
5. ONE FLOOR MOUNTED SLIDE-OUT TRAY IN COMPARTMENTS LS1,LS4,RS1,RS3
6. PAC TRAC ON BACK WALL OF COMPARTMENTS LS1,LS4,RS3
7. TWO SLIDE-OUT TOOL BOARDS WITH PEGBOARD PATTERN IN COMPARTMENTS LS4,RS3
8. ONE VERTICAL PARTITION IN COMPARTMENTS LS4,RS3
9. CIRCUIT BREAKER PANEL IN COMPARTMENT LS4
10. 2-WAY INTERCOM SYSTEM BETWEEN AERIAL TIP AND TURNTABLE
11. AERIAL PEDESTAL RAISED 3.00"
12. ONE WHELEN 700CQELZR L.E.D. LIGHT LOCATED AT THE FRONT OF THE HOSE BED
13. TRIDENT FOLDING STEPS ON AERIAL DEVICE

| REV | DATE | BY | CH |
|---|---|---|---|
| 3 | 23MAY19 | SHU | NDA |
| 2 | 04APR19 | SHU | CHR |
| 1 | 08MAR19 | SHU | CHR |

CHASSIS DATA
MAKE: PIERCE
MODEL: VELOCITY

Pierce MANUFACTURING INC.

TITLE: 75 AERIAL LADDER & BODY ASSEMBLY
300 GALLON WATER TANK

FOR: PASADENA VOLUNTEER FIRE DEPARTMENT
PASADENA, TEXAS

DWG NO.: 33435AD

| | |
|---|---|
| JOB NO. | 33435 |
| SCALE | 1:24 |
| DATE | |
| DRAWN BY | SHU 09JAN19 |
| CHECKED BY | NDA 11JAN19 |
| SHEET SIZE | D |
| SHEET NO. | 1 OF 1 |

View File Created 28-MAY-2019 10:00:36