PUMPER

BODY
Medium Aluminum 2nd Gen Pumper

CHASSIS
Enforcer Chassis

CHASSIS

AXLE, FRONT, CUSTOM
19,500 Lb TAK-4 Axle

AXLE, REAR
27,000 Lb Meritor Axle

ENGINE
450 HP Cummins L9 Engine

TRANSMISSION
Allison 5th Gen, 3000 EVS P

BUMPER
22" Extended Painted Steel

CAB
7000 Enforcer Cab

BODY

WATER TANK
1000 Gallon New York Style Water Tank

COMPT, PUMPER, REAR
Compt, Rear, Tool, Pumper w/ Extended Water Tank

COMPT, PUMPER, LEFT SIDE
152" Rollup Full Height Front & Rear FDLER

COMPT, PUMPER, RIGHT SIDE
152" Rollup Low FDLER

FIRE SUPPRESSION

PUMPHOUSE
45" Control Zone Side Mount

PUMP
2000 GPM Waterous CSU

CROSSLAYS, 1.50"
1.50" Crosslays Not Required

CROSSLAYS, 2.50"
2.50" Crosslay Not Required

SPEEDLAYS
Speedlays Not Required

GENERATOR
Harrison 6kW MSV Hydraulic Generator

Foam System
Foam System Not Required

Foam Cell
Foam Cell Not Required

Side Roll and Frontal Impact Protection

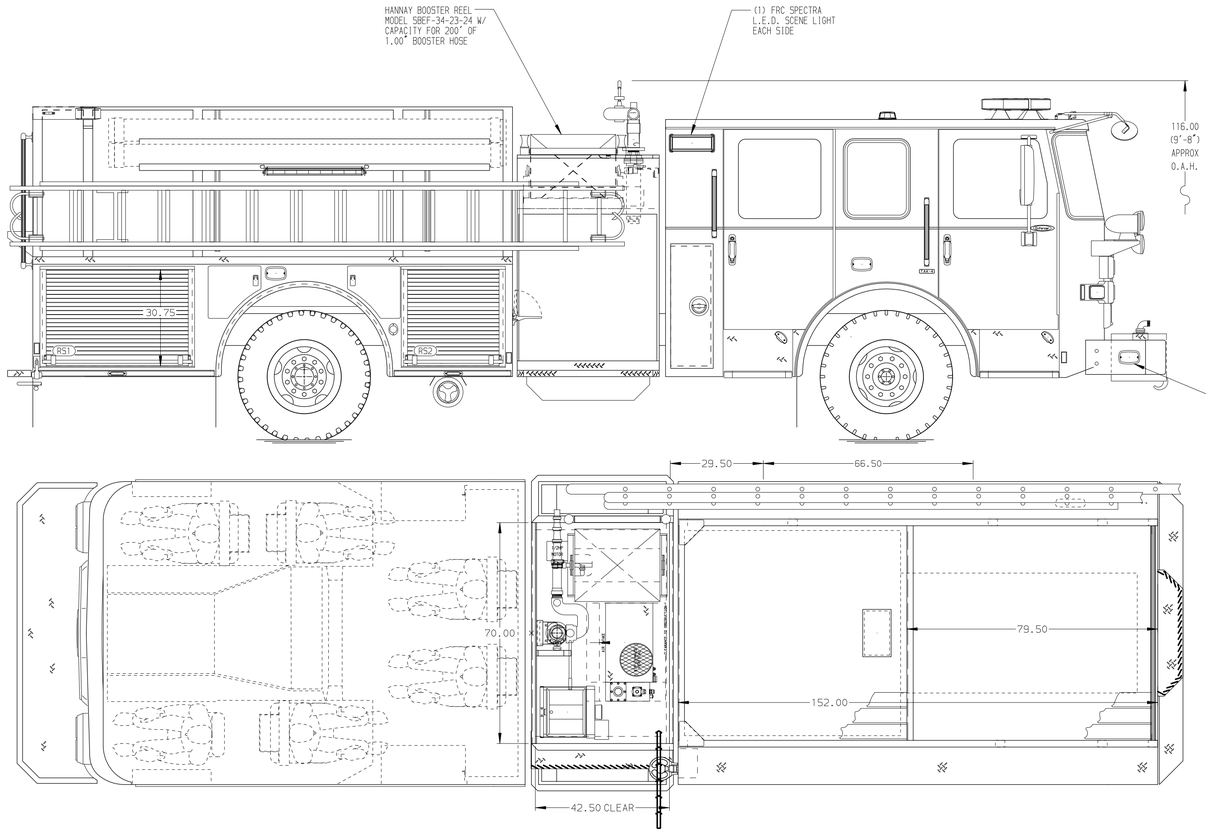

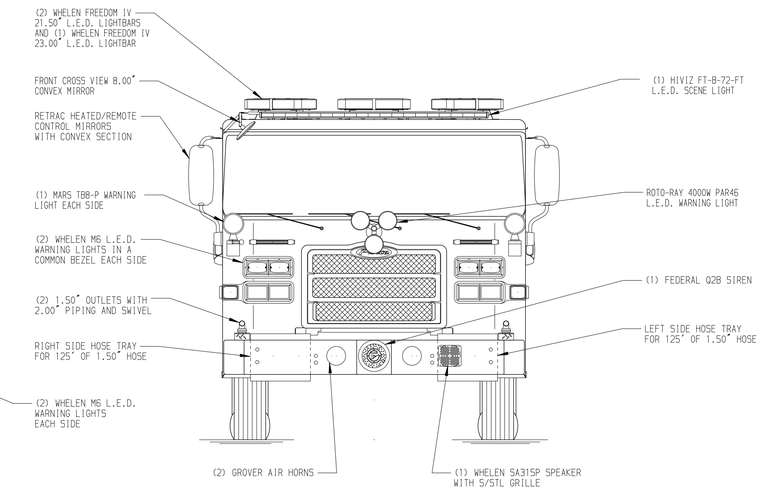

HOSEBED CAPACITY

BED 1
250' OF 1.50" D.J. POLY HOSE

BED 2
200' OF 3.00" D.J. POLY HOSE

BED 3
600' OF 4.00" D.J. POLY HOSE

BED 4
700' OF 4.00" D.J. POLY HOSE

BED 5
250' OF 2.50" D.J. POLY HOSE

BED 6
200' OF 2.00" D.J. POLY HOSE

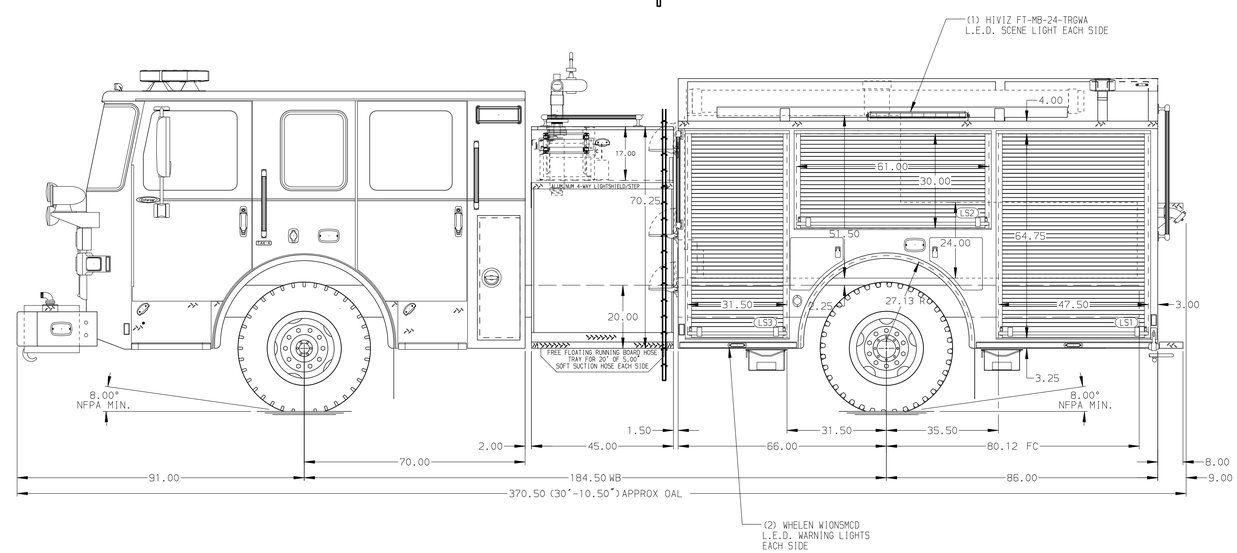

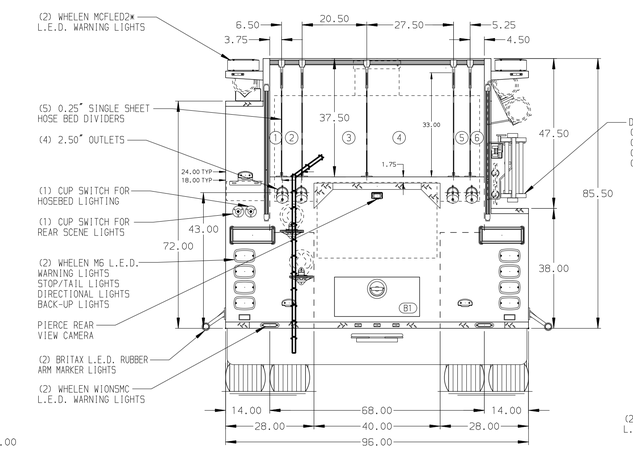

NOTE

DIMENSIONS SHOWN ARE APPROXIMATE AND ARE SUBJECT TO MINOR DEVIATIONS AS MAY OCCUR OR BE NECESSARY IN CONSTRUCTION.
MINOR DETAILS NOT SHOWN.

1. SHORELINE RECEPTACLE WITH KUSSMAUL SUPER AUTO-EJECT LOCATED ON DRIVER SIDE OF THE CAB
2. AIR INLET WITH DISCONNECT COUPLING IN THE DRIVER SIDE STEPWELL
3. BATTERY CHARGER LOCATED BEHIND DRIVERS SEAT
4. BATTERY CHARGE INDICATOR LOCATED ON THE DRIVER SIDE SEAT RISER
5. AUTOMATIC TIRE CHAINS
6. CIRCUIT BREAKER PANEL LOCATED PER SHOP ORDER
7. EIGHT 120V DUPLEX RECEPTACLES LOCATED PER SHOP ORDER
8. AKRON CABLE REEL MODEL ERWC-15-10 WITH 200' OF 10/3 CABLE LOCATED IN LS CARGO AREA

REV	DATE	BY	CH
B	08APR19	COL	KBO
A	28FEB19	COL	KBO

CHASSIS DATA
MAKE: PIERCE
MODEL: ENFORCER

Pierce MANUFACTURING INC.

TITLE: Pierce Pumper Approval Drawing –
FOR: Quarryville Fire Company No 1 –
DWG NO.: 33465AD

JOB NO.	33465
SCALE	1:24
DATE	
DRAWN BY	COL 07FEB19
CHECKED BY	KBO 07FEB19
SHEET SIZE	D
SHEET NO.	1 OF 1

View File Created 11-APR-2019 07:40:03