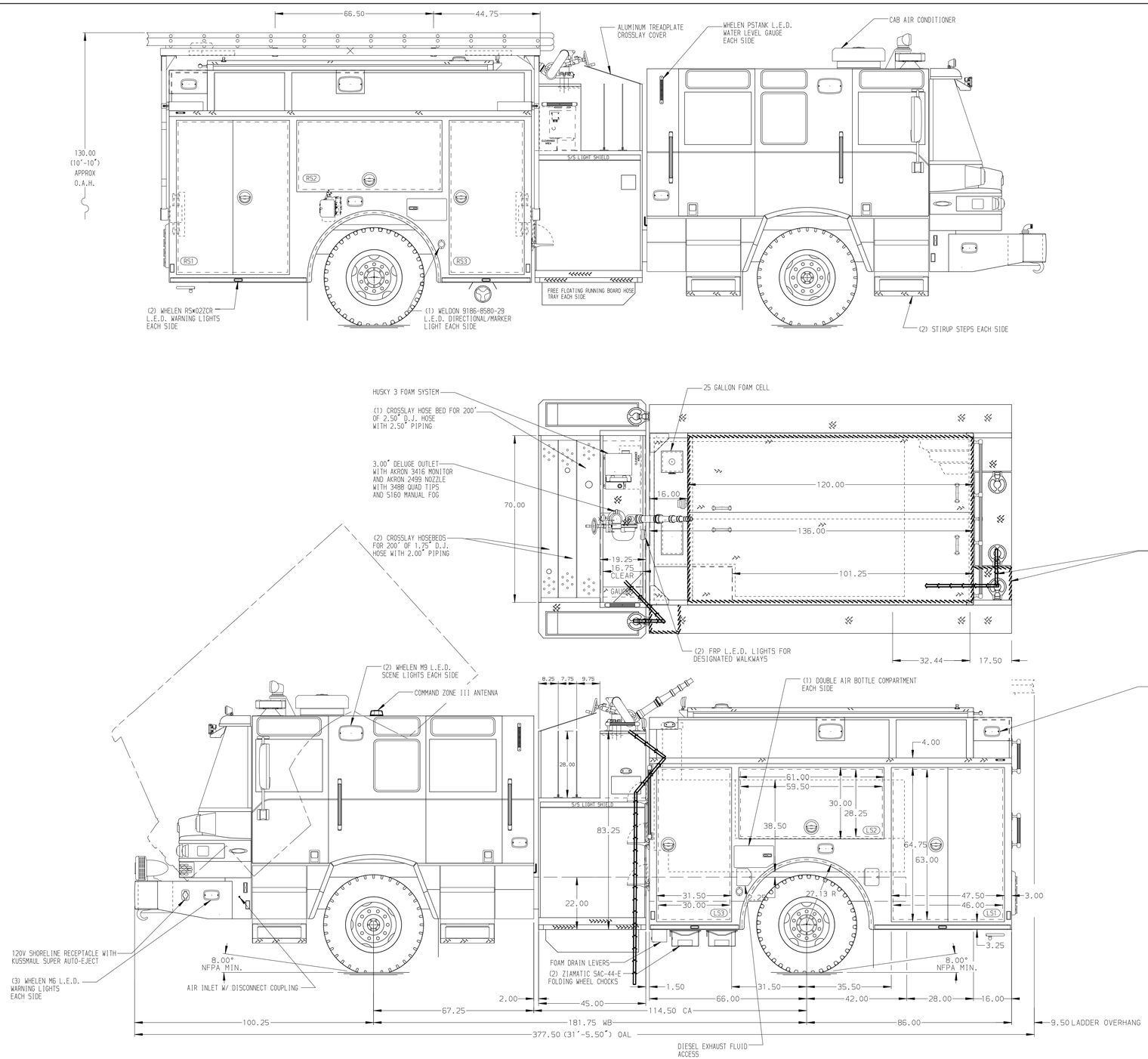

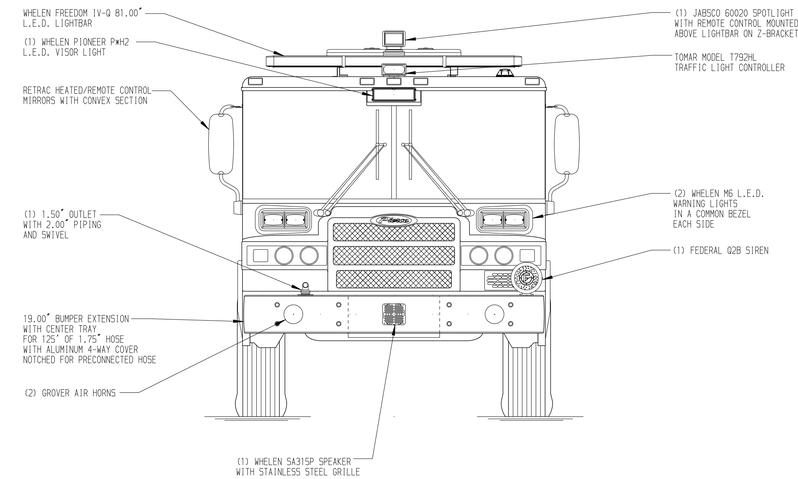

HOSEBED CAPACITIES

1. TWO POLY TRAYS EACH WITH 200' OF 1.50" HOSE WITH SHELF ON TOP TO HOLD TWO 100' OF 1.75" HOSE BUNDLES
2. 400' OF 1.75" HOSE
3. 600' OF 2.50" HOSE
4. 800' OF 5.00" HOSE

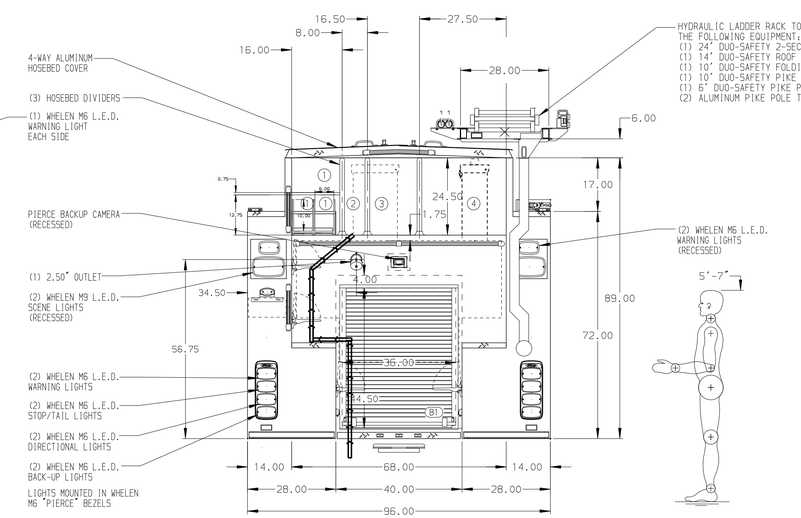

ALUMINUM BODY

SIDE ROLL AND FRONTAL IMPACT PROTECTION

NOTE

DIMENSIONS SHOWN ARE APPROXIMATE AND ARE SUBJECT TO MINOR DEVIATIONS AS MAY OCCUR OR BE NECESSARY IN CONSTRUCTION.
MINOR DETAILS NOT SHOWN.

1. ONSPOT AUTOMATIC TIRE CHAINS TO BE PROVIDED AT REAR
2. BATTERY CHARGER LOCATED IN LS3
3. BATTERY CHARGER INDICATOR LOCATED ON DRIVER'S SEAT RISER
4. DUAL L.E.D. LIGHT STRIPS LOCATED IN HOSE BED
5. REVERSED HINGED DOOR ON LS3
6. DRIP PAN GUARD FOR ROLL-UP DOOR IN B1
7. ADJUSTABLE FULL WIDTH/ DEPTH SHELVES TWO IN LS3 AND RS1 AND ONE IN LS1, LS2, AND RS3
8. ONE FLOOR MOUNTED SLIDE-OUT TRAY IN RS1 AND B1
9. SWING-OUT TOOL BOARD WITH PEGBOARD PATTERN IN RS2
10. TWO 120 V DUPLEX RECEPTACLES IN THE D.S. EMS CABINET AND ONE IN THE P.S. EMS CABINET
11. ONE 120V DUPLEX RECEPTACLE IN LS1
12. ONE FIXED FULL WIDTH/ DEPTH SHELF WITH 1" HIGH SIDES IN B1

REV	DATE	BY	CH
1	14JUN19	KLE	KWI
2	02MAY19	LST	RWA
3	04APR19	LST	RWA
4	13FEB19	LST	AZA

CHASSIS DATA
MAKE: PIERCE
MODEL: QUANTUM

Pierce MANUFACTURING INC.

TITLE: 1500-D-775P, 750 GAL OF WATER W/ 25 GAL FOAM CELL 152" BODY, HYDRAULIC LADDER RACK, (3) X-LAYS
FOR: CARSON CITY CARSON CITY, NEVADA
DWG NO.: 33476AD

JOB NO.	33476
SCALE	1:24
DATE	
DRAWN BY	LST 18JAN19
CHECKED BY	AZA 30JAN19
SHEET SIZE	D
SHEET NO.	1 OF 1

View File Created 18-JUN-2019 15:38:04