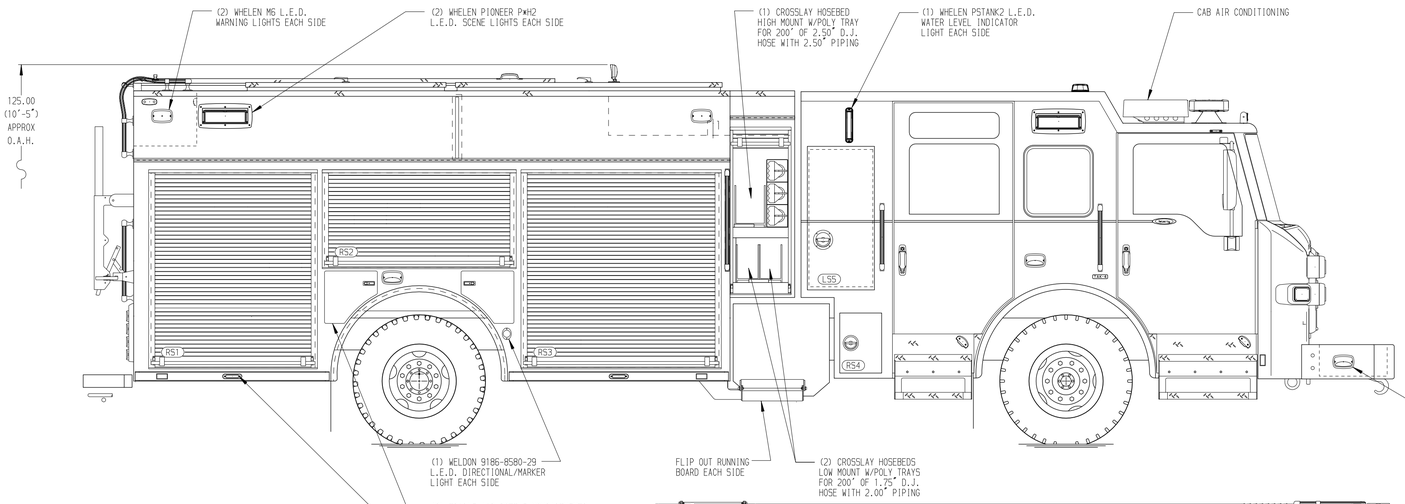

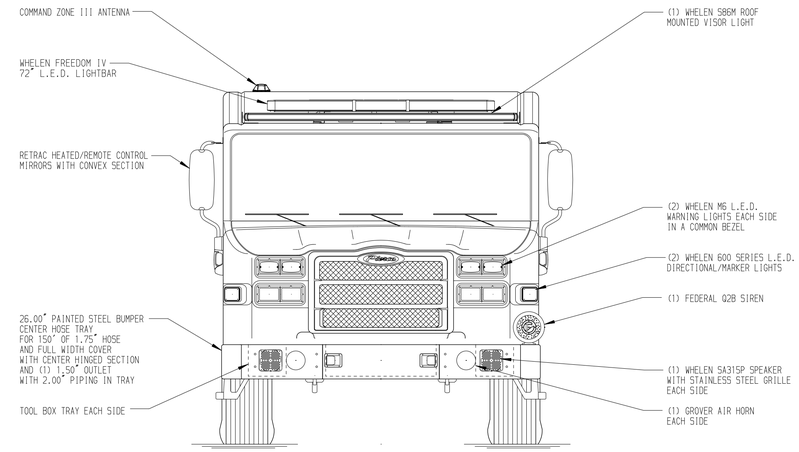

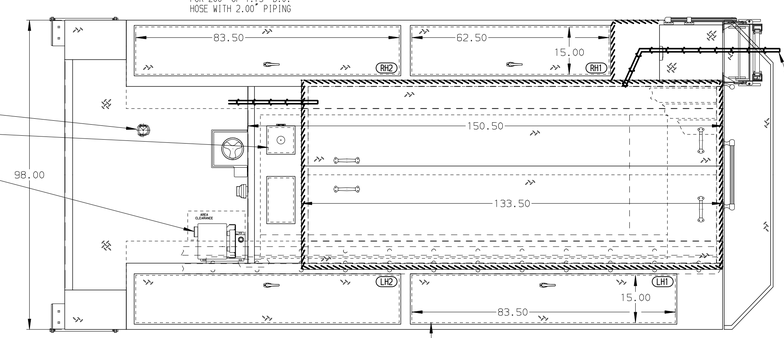

HOSEBED CAPACITIES

1 - 1000' OF 5.00" HOSE

2 - 400' OF 3.00" HOSE

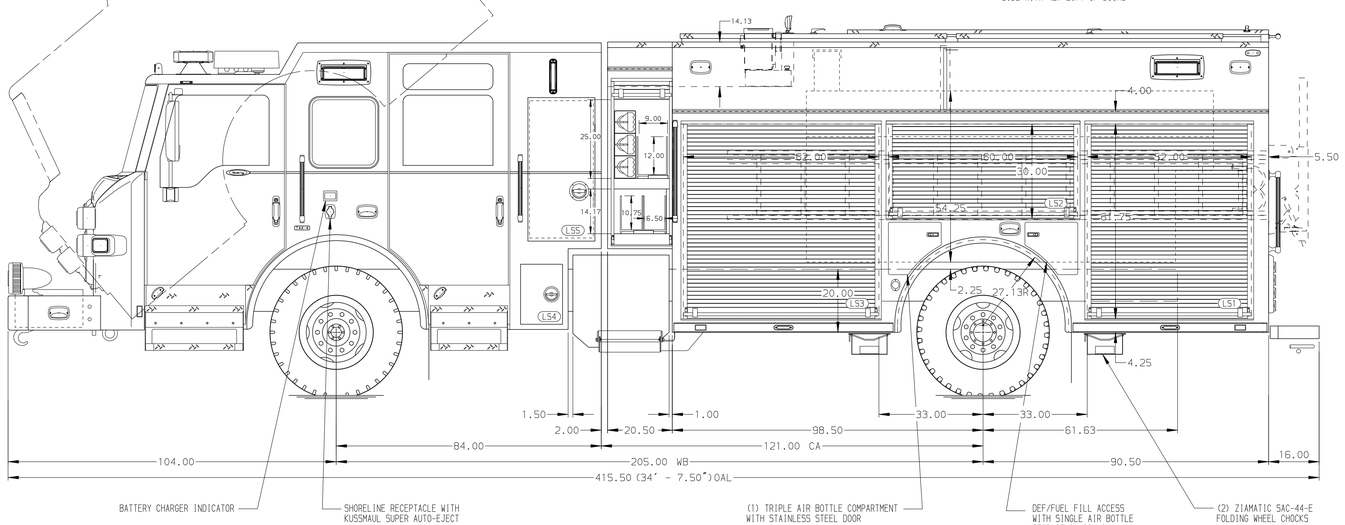

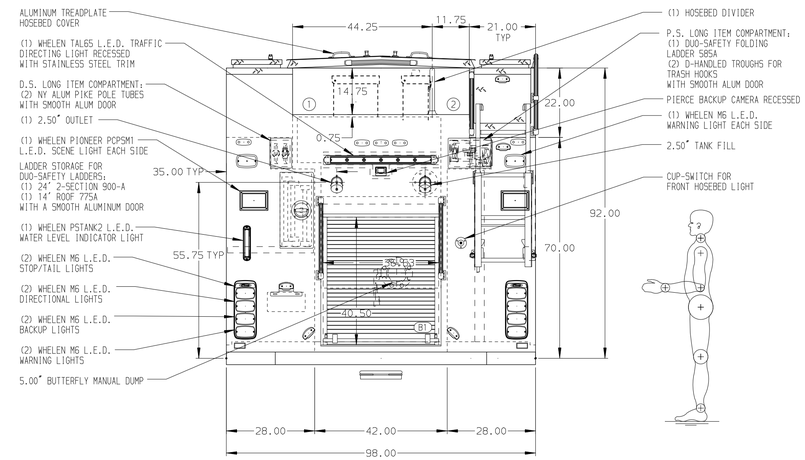

ALUMINUM BODY

NOTE

DIMENSIONS SHOWN ARE APPROXIMATE AND ARE SUBJECT TO MINOR DEVIATIONS AS MAY OCCUR OR BE NECESSARY IN CONSTRUCTION.
MINOR DETAILS NOT SHOWN.

1. AIR INLET/OUTLET W/DISCONNECT COUPLING LOCATED ON DRIVER'S SIDE PUMP PANEL
2. BATTERY CHARGER LOCATED BEHIND DRIVER'S SEAT
3. WHELEN 70CQEL2R L.E.D. LIGHT LOCATED AT THE FRONT OF THE HOSE BED
4. ONE FULL WIDTH/DEPTH ADJUSTABLE SHELF IN COMPARTMENT LS3, RS1, RS2, RS3, TWO IN LS1
5. ONE ADJUSTABLE SLIDE-OUT TRAY IN COMPARTMENT B1
6. ONE ADJUSTABLE TILTING SLIDE-OUT TRAY IN COMPARTMENT RS2
7. ONE FLOOR MOUNTED SLIDE-OUT TRAY IN COMPARTMENT LS1 & B1
8. ONE SWING-OUT ALUMINUM TOOL BOARD IN COMPARTMENT LS2
9. ONE FLOOR MOUNTED SLIDE-OUT TRAY WITH FLAT TOP IN COMPARTMENT RS1
10. TWO SLIDE-OUT TOOL BOARDS WITH PEGBOARD PATTERN IN COMPARTMENT RS1
11. RETENTION NETTING IN COMPARTMENT RS3
12. ONE VERTICAL PARTITION IN COMPARTMENT RS1 & RS3
13. THREE ADJUSTABLE VERTICAL PARTITIONS FOR HOSE STORAGE IN COMPARTMENT LS3
14. PEGBOARD ON BACK WALL W/TRACK OF COMPARTMENT LS2 & LS3
15. LITTLE GIANT LADDER STORAGE IN COMPARTMENT RS3

REV	DATE	BY	CH
D	20JUN19	AMI	CHR
C	14JUN19	KLE	KWI
B	16MAY19	AMI	CHR
A	26APR19	AMI	CHR

CHASSIS DATA: MAKE PIERCE; MODEL VELOCITY FR

Pierce MANUFACTURING INC.

TITLE: 1500-D-1000P W/20G FOAM CELL, 189" RESCUE PUC BODY (3)XLAYS, REAR DUMP, HUSKY 3, 35' 3-SECTION LADDER

FOR: WILSON COUNTY ESD #1(LA VERNIA VFD) LA VERNIA, TEXAS

DWG NO.: 33489AD

JOB NO.	33489
SCALE 1:24	DATE
DRAWN BY AMI	28JAN19
CHECKED BY CDU	28JAN19
SHEET SIZE D	SHEET NO. 1 OF 1

View File Created 24-JUN-2019 07:09:39