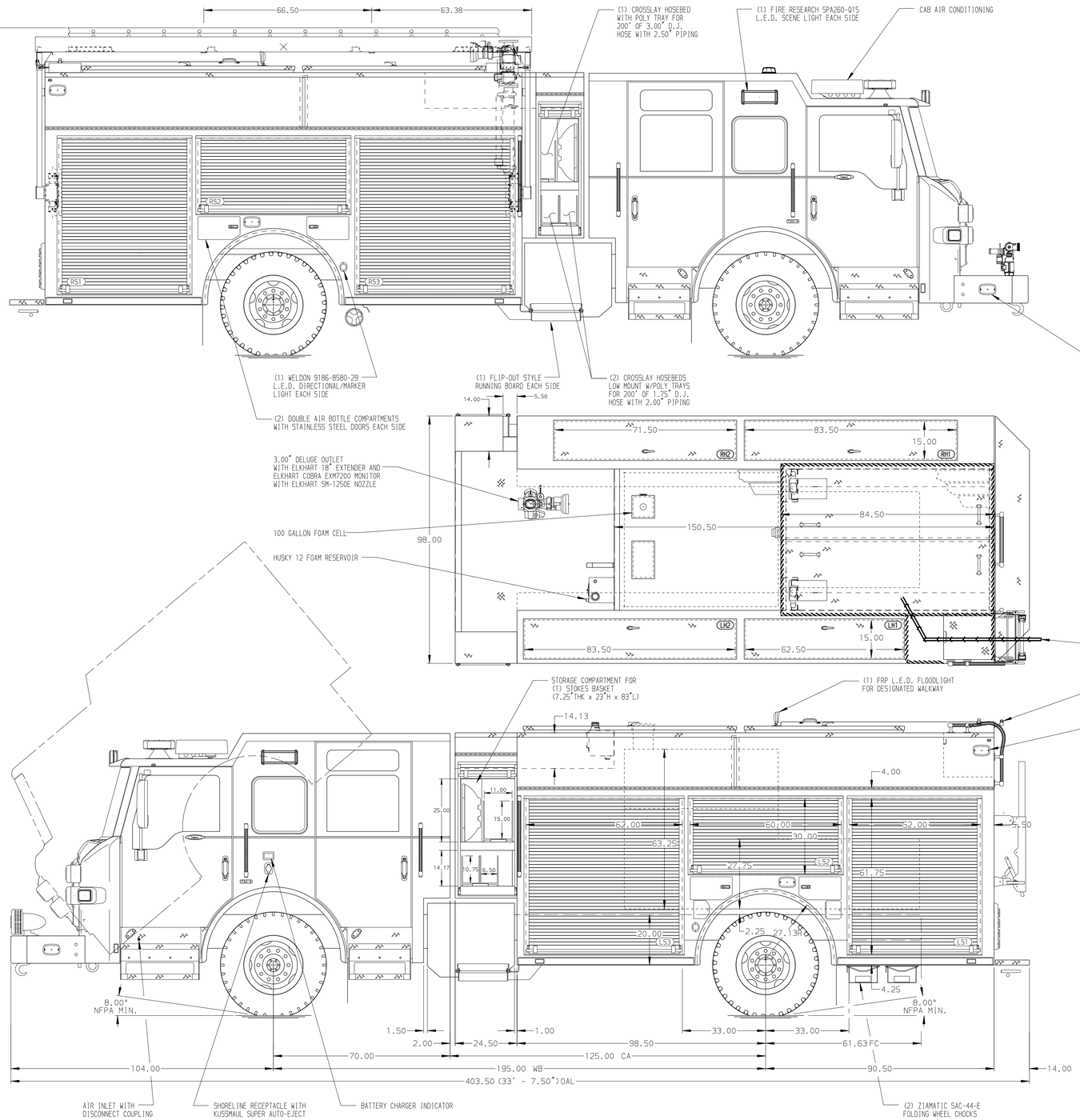

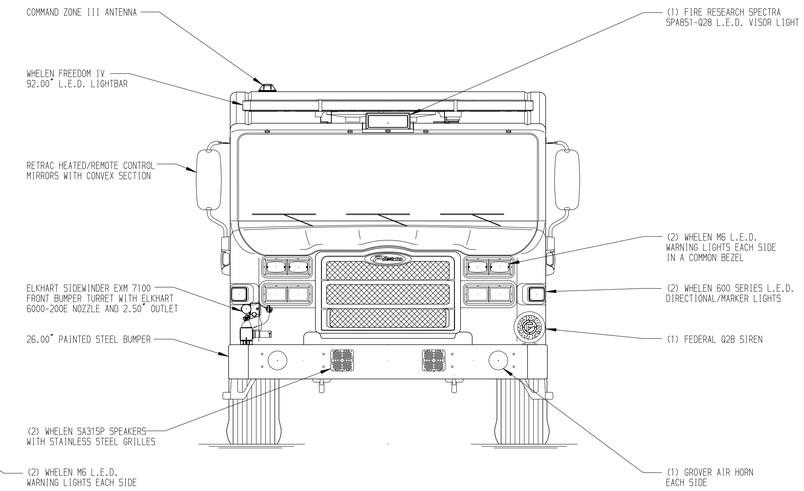

HOSEBED CAPACITIES

1 - 400' OF 3.00" HOSE
2 - 500' OF 7.25" HOSE
3 - 400' OF 3.00" HOSE

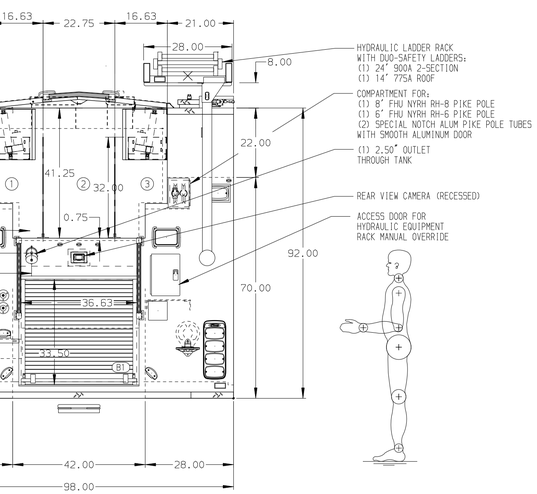

ALUMINUM BODY

MAXIMUM O.A.H. 133"

NOTE

DIMENSIONS SHOWN ARE APPROXIMATE AND ARE SUBJECT TO MINOR DEVIATIONS AS MAY OCCUR OR BE NECESSARY IN CONSTRUCTION.
MINOR DETAILS NOT SHOWN.

1. BATTERY CHARGER LOCATED IN PUMP PLUMBING AREA
2. DUAL L.E.D. LIGHT STRIPS LOCATED IN HOSE BED
3. ONE FULL WIDTH/DEPTH ADJUSTABLE SHELF IN COMPARTMENT LS1, LS3, RS1 & RS3
4. ONE FLOOR MOUNTED SLIDE-OUT TRAY IN COMPARTMENT B1

REV	DATE	BY	CH
5	14JUN19	KLE	KWI
4	20MAY19	AMI	CHR
3	23APR19	AMI	CHR

CHASSIS DATA
MAKE: PIERCE
MODEL: IMPEL FR

Pierce MANUFACTURING INC.

TITLE: 1500-D-750P W/100G FOAM CELL, 189" RESCUE PUC BODY (3)CROSSLAYS, LOW HOSEBED, DELUGE, HYD LADDER RACK

FOR: MARATHON - GARYVILLE REFINERY
GARYVILLE, LOUISIANA

DWG NO.: 33519AD

JOB NO.	33519
SCALE	1:24
DATE	
DRAWN BY	AMI
DATE	01MAR19
CHECKED BY	CDU
DATE	01MAR19
SHEET SIZE	D
SHEET NO.	1 OF 1

View File Created 19-JUN-2019 08:54:04