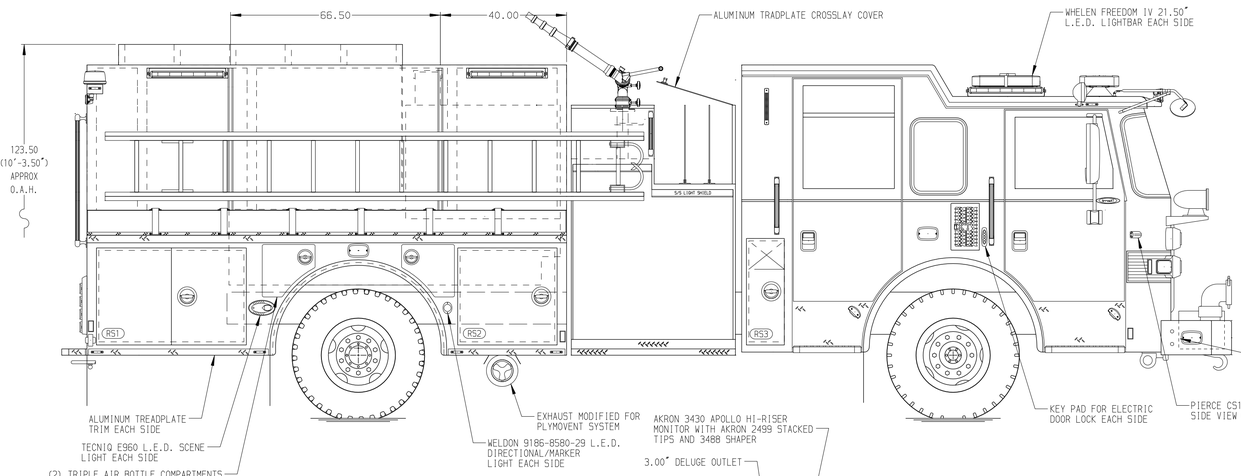

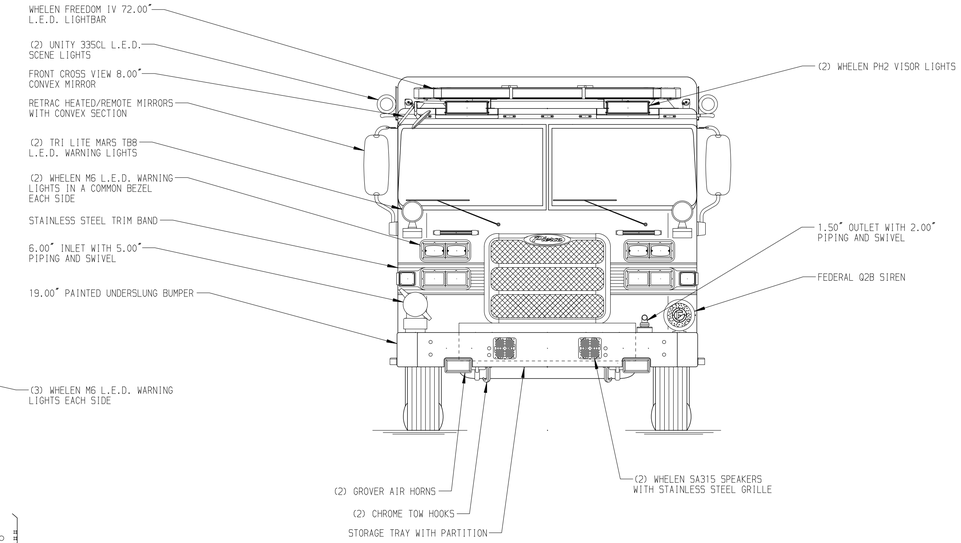

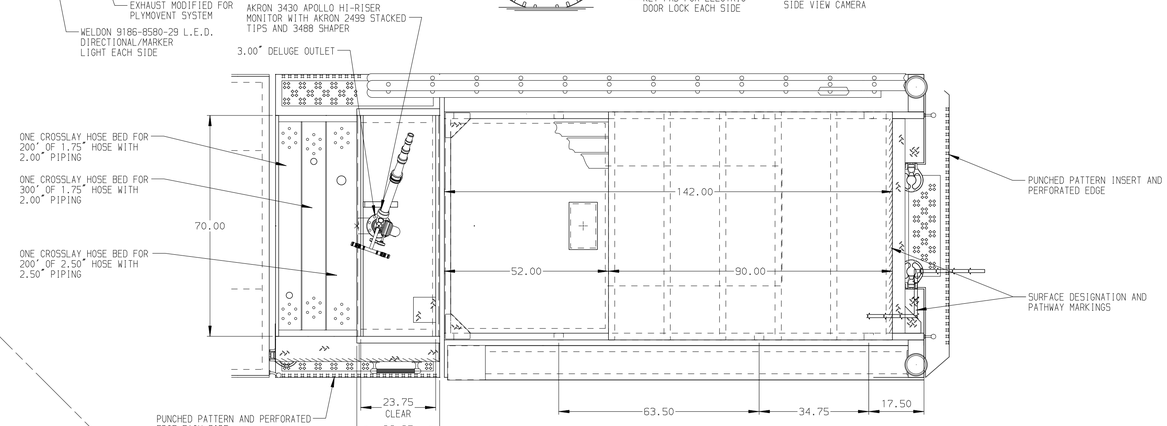

HOSEBED CAPACITIES

1. 500' OF 2.50" D.J. POLY HOSE
2. 500' OF 2.50" D.J. POLY HOSE
3. 1000' OF 5.00" MERCEDES HIGH WATER HOSE
4. 500' OF 3.00" D.J. POLY HOSE

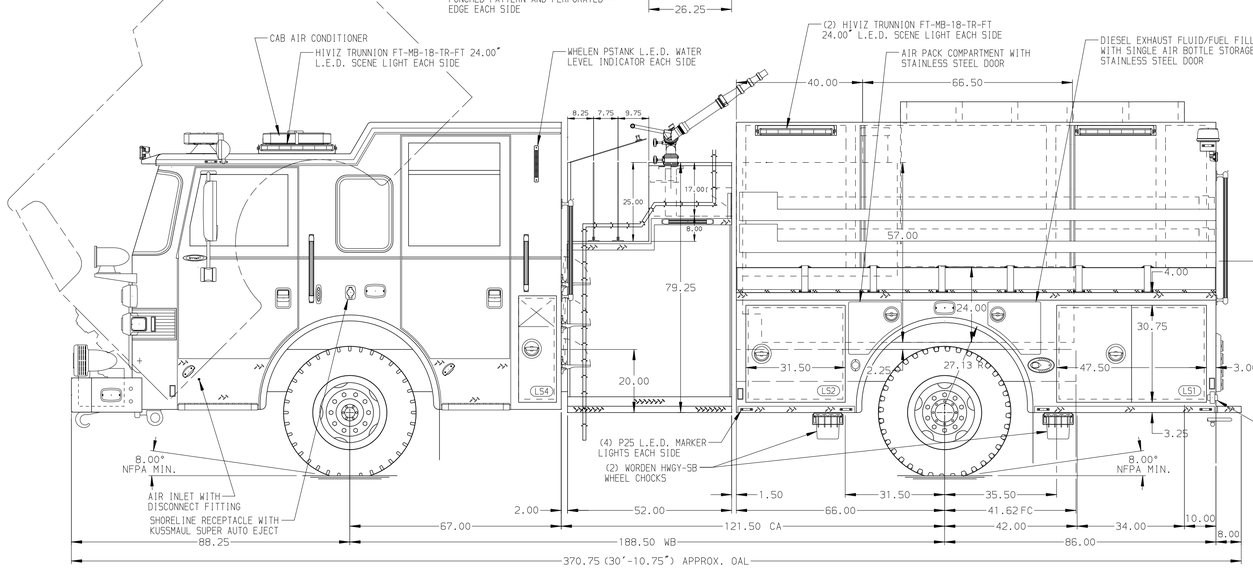

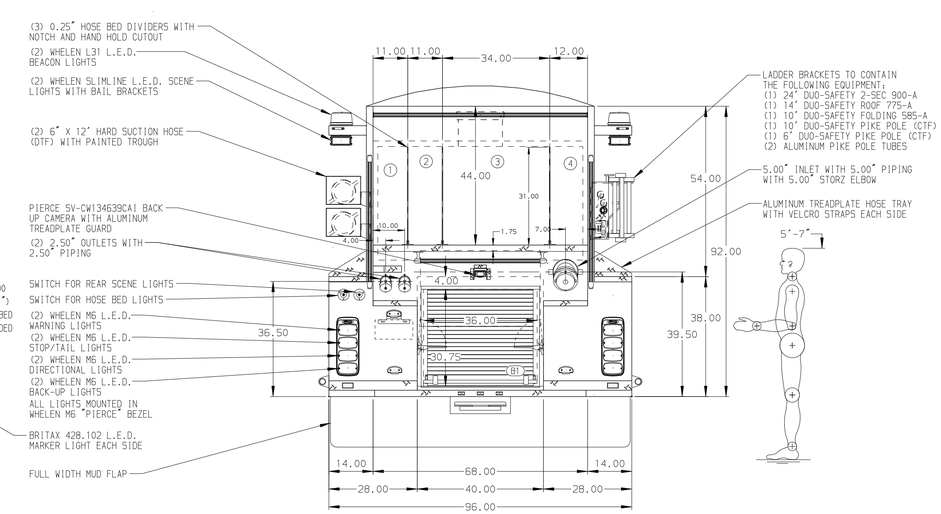

ALUMINUM BODY

SIDE ROLL AND FRONTAL IMPACT PROTECTION

NOTE

DIMENSIONS SHOWN ARE APPROXIMATE AND ARE SUBJECT TO MINOR DEVIATIONS AS MAY OCCUR OR BE NECESSARY IN CONSTRUCTION.
MINOR DETAILS NOT SHOWN.

1. RUD AUTOMATIC TIRE CHAINS TO BE PROVIDED AT REAR
2. BATTERY CHARGER LOCATED BEHIND DRIVER SEAT
3. BATTERY CHARGER INDICATOR LOCATED ON DRIVER SEAT WITH BRACKET
4. L.E.D. LIGHT STRIPS WALKING SURFACE LIGHTING LOCATED IN THE CARGO AREA
5. ONE FULL WIDTH/DEPTH ADJUSTABLE SHELF WITH SIDES IN COMPARTMENT-LS2
6. ONE FLOOR MOUNTED SLIDE-OUT TRAY WITH SIDES IN COMPARTMENT-LS1,RS1,B1
7. ONE ADJUSTABLE SLIDE-OUT TRAY WITH SIDES IN COMPARTMENT-RS1
8. ONE FLOOR MOUNTED SLIDE-OUT TRAY WITH SPECIAL SIDES IN COMPARTMENT-LS2,RS2
9. PARTITION BETWEEN COMPARTMENTS LS1/B1 AND RS1/B1
10. ONE VERTICAL DIVIDER WITH ADJUSTABLE TRACKS IN COMPARTMENT-LS2,RS2
11. ONE 120V DUPLEX RECEPTACLE IN COMPARTMENT-LS1,RS1
12. ONE VERTICAL PARTITION IN COMPARTMENT-RS1

REV	DATE	BY	CH
7	22APR19	BST	DTS
6	09APR19	BST	DTS
5	08APR19	BST	DTS
4	21FEB19	BST	NPA

CHASSIS DATA
MAKE: PIERCE
MODEL: ARROW-XT

Pierce MANUFACTURING INC.

TITLE: 2000-D-750P,152" PUMPER BODY,DELUGE,(3) CROSSLAYS
P.S. LADDER BRACKETS,SIDE CONTROL PUMP HOUSE

FOR: PARSIPPANY TROY HILLS FIRE DISTRICT #4 LAKE HIAWATHA
LAKE HIAWATHA, NJ

DWG NO.: 33527AD

JOB NO.	33527
SCALE	1:24
DATE	
DRAWN BY	BST 06FEB19
CHECKED BY	NPA 06FEB19
SHEET SIZE	D
SHEET NO.	1 OF 1

View File Created 29-MAY-2019 08:05:36