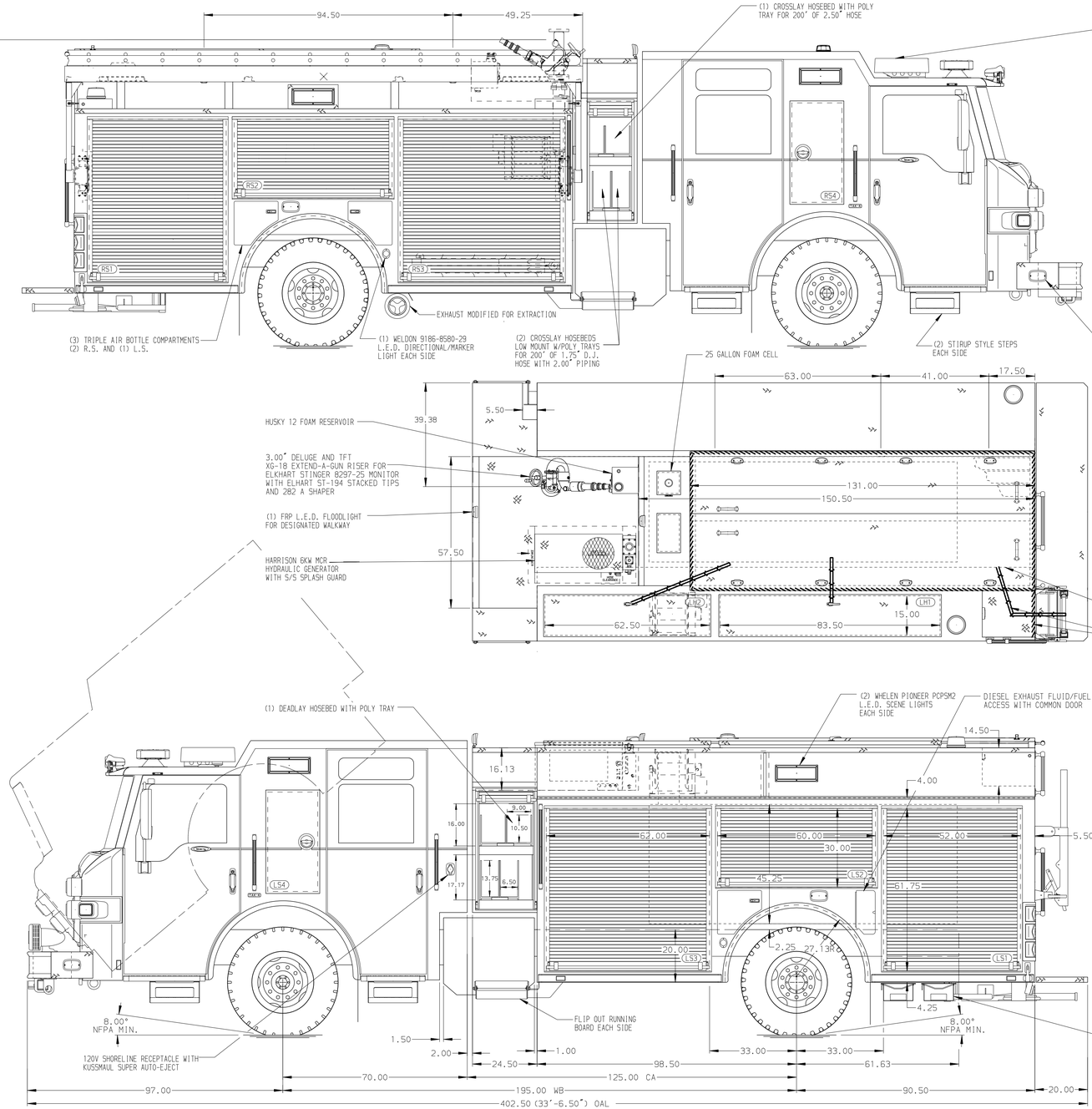

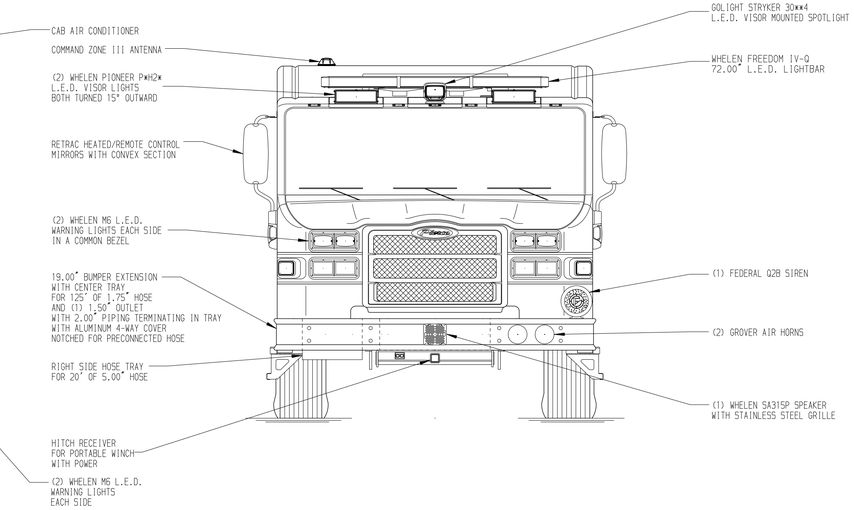

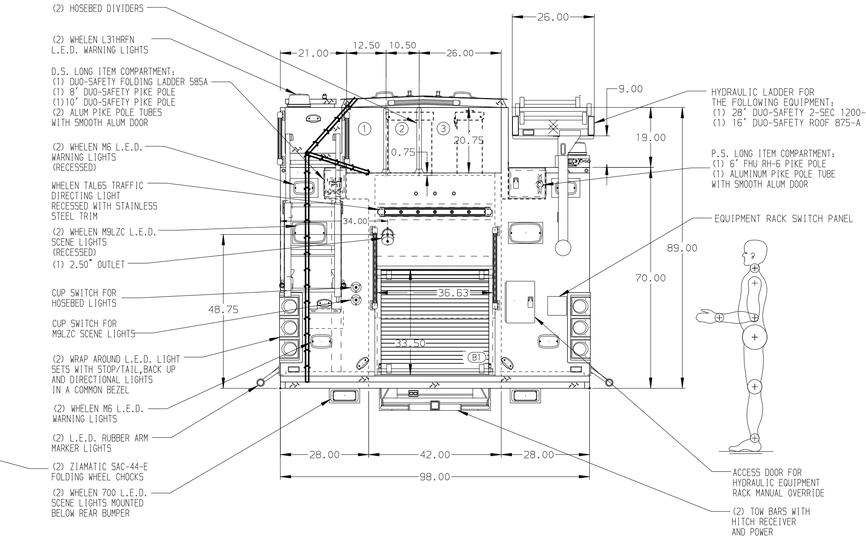

HOSEBED CAPACITIES

1. 200' OF 2.50" APARTMENT LINE HOSE W/ 150' OF 1.75" HOSE
2. 500' OF 2.50" D.J. POLY HOSE
3. 700' OF 5.00" D.J. POLY HOSE

ALUMINUM BODY

MAXIMUM O.A.H. 118.00"

SIDE ROLL AND FRONTAL IMPACT PROTECTION

NOTE

DIMENSIONS SHOWN ARE APPROXIMATE AND ARE SUBJECT TO MINOR DEVIATIONS AS MAY OCCUR OR BE NECESSARY IN CONSTRUCTION.
MINOR DETAILS NOT SHOWN.

1. BATTERY CHARGER LOCATED IN LS3
2. BATTERY CHARGER INDICATOR LOCATED NEAR D.S. SEAT RISER WITH BRACKET
3. DUAL L.E.D. LIGHT STRIPS LOCATED IN HOSE BED
4. ADJUSTABLE FULL WIDTH/DEPTH SHELVES TWO IN LS1 AND LS3 AND ONE IN RS1 AND RS3
5. ALUMINUM SWING-OUT TOOLBOARD WITH PAC TRAC IN RS2
6. ONE ADJUSTABLE TILT/ SLIDE-OUT TRAY IN LS2
7. MOUNTING RACK FOR (4) FIRE EXTINGUISHERS LOCATED IN RS3
8. (2) ADDITIONAL POLY TRAYS SHIPPED LOOSE
9. CIRCUIT BREAKER PANEL IN LS3
10. AIR INLET WITH DISCONNECT COUPLING ON D.S. STEP WELL
11. ONE AKRON ERWC-15-10 CORD REEL WITH 200' OF 10/3 CABLE IN LH2 AND RS3
12. STORAGE FOR A MODEL 17 LITTLE GIANT LADDER (CTF)
13. ONE 120V 5-PLACE RECEPTACLE STRIP IN EACH EMS CABINET

REV	DATE	BY	CH
7	08APR19	KLE	EFA
6	22MAR19	LST	EFA
5	22FEB19	LST	AZA

CHASSIS DATA
MAKE: PIERCE
MODEL: VELOCITY

Pierce MANUFACTURING INC.

TITLE: 1500-D-750P, 725 GAL OF WATER W/ 25 GAL FOAM CELL 189" PUC RESCUE, (3) X-LAYS, HYD. LADDER RACK,DELUGE

FOR: APPLETON FIRE DEPARTMENT
APPLETON, WISCONSIN

DWG NO.: 33531AD

JOB NO.	33531
SCALE 1:24	DATE
DRAWN BY LST	29JAN19
CHECKED BY AZA	06FEB19
SHEET SIZE D	SHEET NO. 1 OF 1

View File Created 17-APR-2019 12:15:54