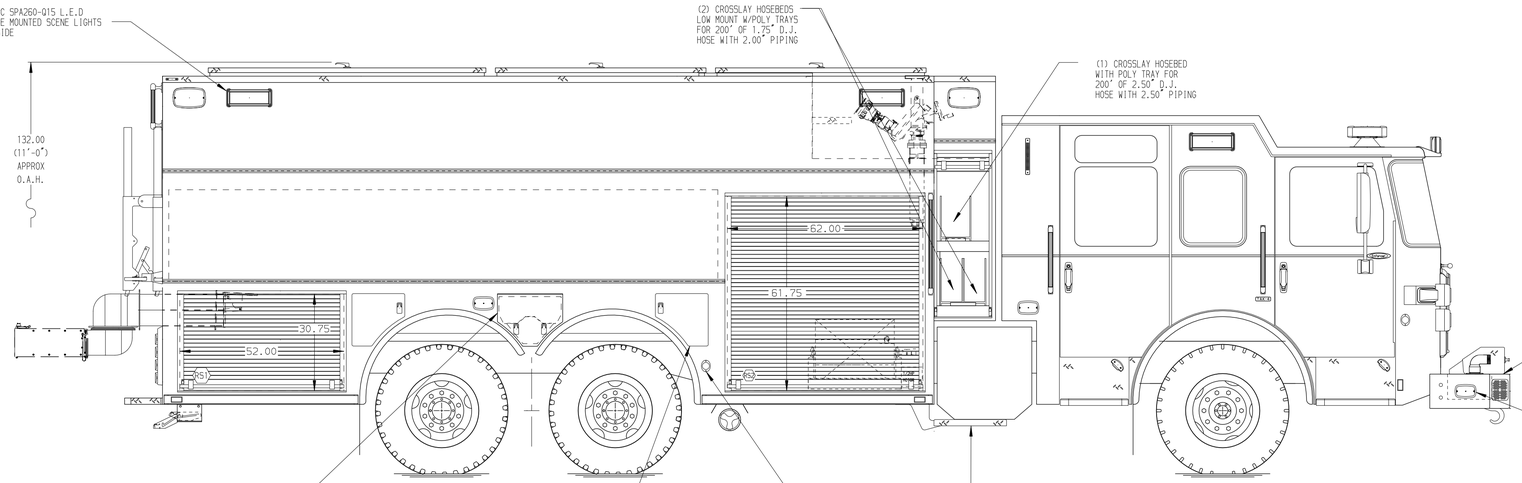

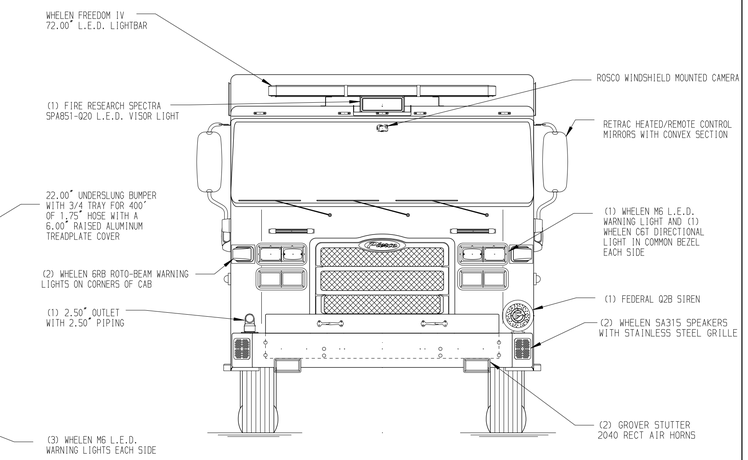

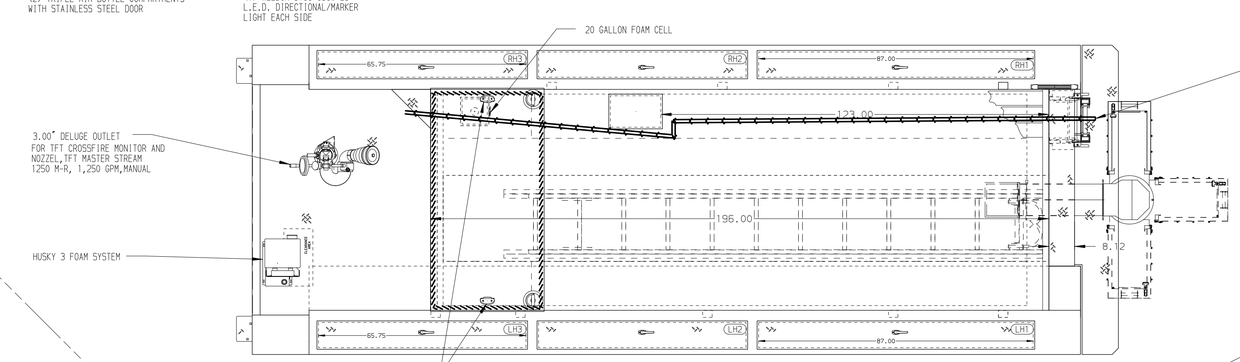

HOSEBED CAPACITIES
1. 1000' OF 5.00" D.J. HOSE
2. 1000' OF 3.00" D.J. HOSE

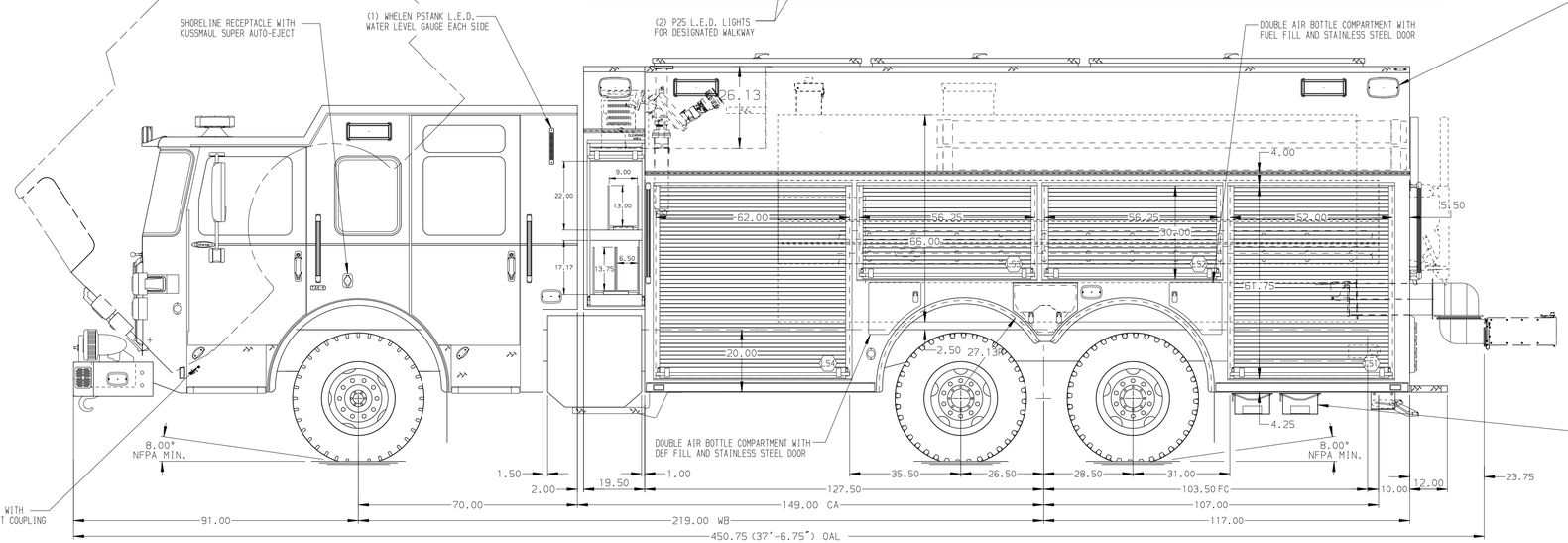

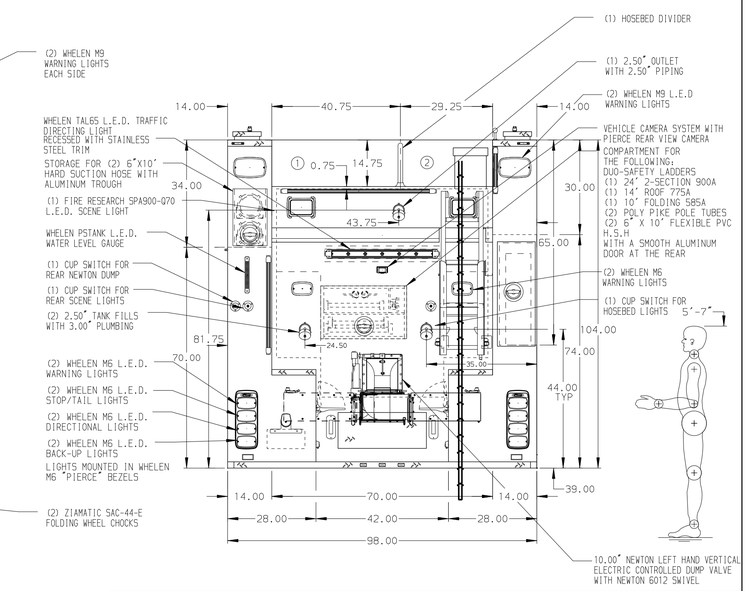

ALUMINUM BODY

SIDE ROLL AND FRONTAL IMPACT PROTECTION

NOTE

DIMENSIONS SHOWN ARE APPROXIMATE AND ARE SUBJECT TO MINOR DEVIATIONS AS MAY OCCUR OR BE NECESSARY IN CONSTRUCTION.
MINOR DETAILS NOT SHOWN.

1. BATTERY CHARGER LOCATED IN COMPARTMENT LS4
2. BATTERY CHARGE INDICATOR LOCATED ON DRIVER'S SEAT RISER
3. DUAL L.E.D. LIGHT STRIPS LOCATED IN HOSE BED
4. ONE FULL WIDTH/DEPTH ADJUSTABLE SHELF IN COMPARTMENT TBD
5. ONE FLOOR MOUNTED SLIDE-OUT TRAY IN COMPARTMENT RS1 & RS2
6. SLIDE-OUT TOOL BOARD WITH PEGBOARD PATTERN IN COMPARTMENT LS4 TWO IN LS1
7. ONE VERTICAL PARTITION IN COMPARTMENT LS1
8. INSTA-CHAIN AUTOMATIC TIRE CHAINS
9. HANNAY MODEL SBEF32-21-22-8 BOOSTER REEL WITH 150' OF 1.00" HOSE IN RS2

REV	DATE	BY	CH
5	26AUG19	MMF	EFA
4	24JUL19	MMF	EFA
3	19JUN19	KLE	KWI
2	28MAY19	MMF	EFA
1	02MAY19	MMF	EFA

CHASSIS DATA
MAKE: PIERCE
MODEL: ENFORCER

Pierce MANUFACTURING INC.

TITLE: 1500-D-2450P, 2430 GAL WATER W/20 GAL FOAM, 244" PUC TANKER, LADDERS AND (2) H.S.H THRU TANK, DELUGE

FOR: HARMONY TOWNSHIP FIRE DEPARTMENT
HARMONY, INDIANA

DWG NO. 33577AD

JOB NO.	33577
SCALE 1:24	DATE
DRAWN BY MMF	08FEB19
CHECKED BY NPE	14FEB19
SHEET SIZE D	SHEET NO. 1 OF 1

View File Created 05-SEP-2019 11:04:09