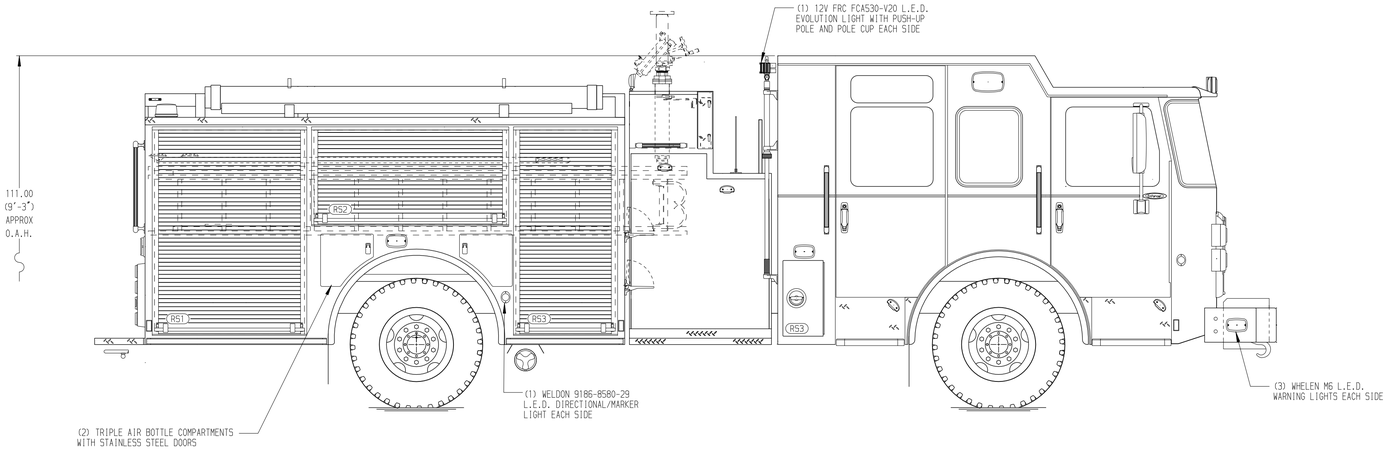

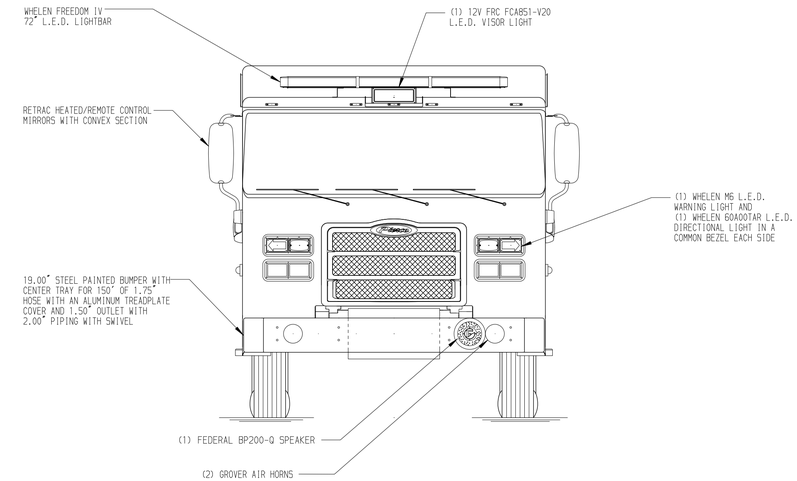

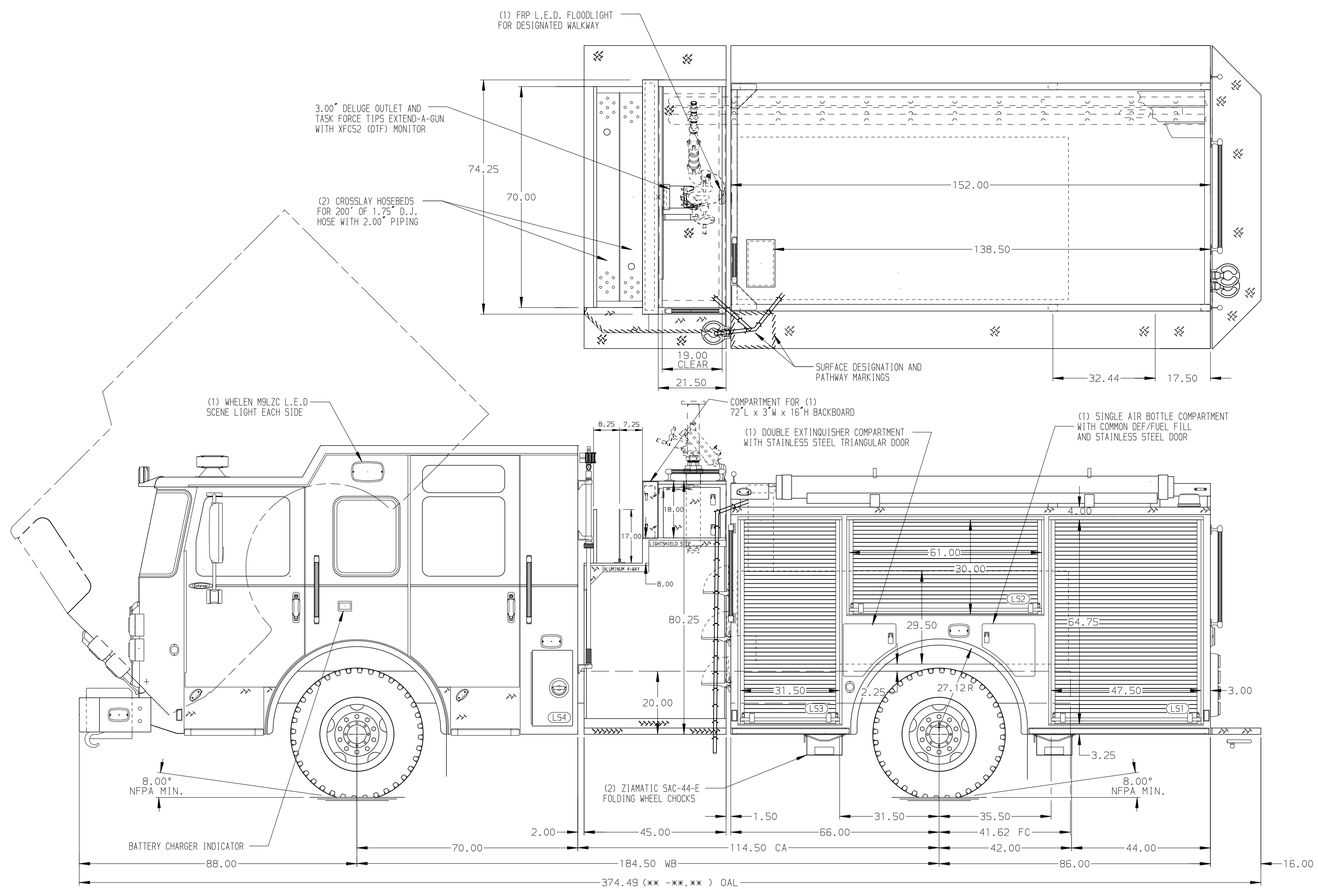

HOSEBED CAPACITIES

1. 300' OF 3.00" D.J. HOSE
2. 500' OF 2.50" D.J. HOSE
3. 1000' OF 5.00" D.J. HOSE
4. 200' OF 2.50" D.J. HOSE

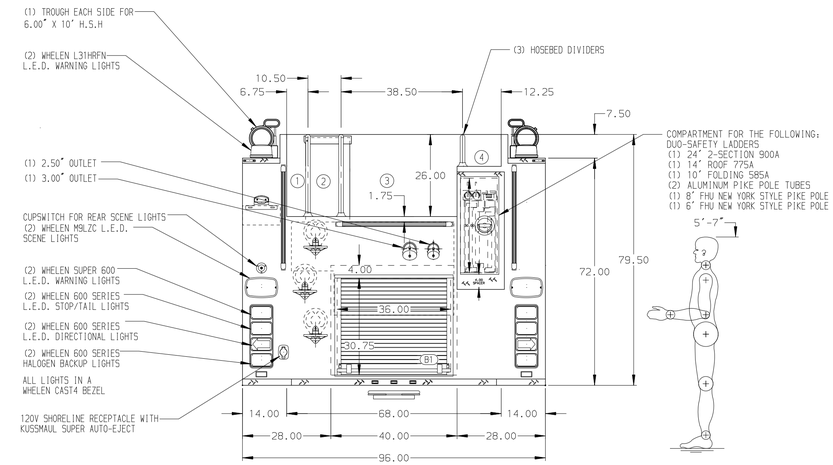

ALUMINUM BODY

NOTE

DIMENSIONS SHOWN ARE APPROXIMATE AND ARE SUBJECT TO MINOR DEVIATIONS AS MAY OCCUR OR BE NECESSARY IN CONSTRUCTION.
MINOR DETAILS NOT SHOWN.

1. BATTERY CHARGER LOCATED BEHIND DRIVER'S SEAT
2. ONE FULL WIDTH/DEPTH ADJUSTABLE SHELF IN COMPARTMENT LS3, B1, AND TWO IN LS1
3. FLOOR IN COMPARTMENT RS1 TO BE ANGLED FOR CRIBBING (FRONT 2"TALLER THAN REAR)

REV	DATE	BY	CH
2	29MAY19	MWA	LPA
1	09MAY19	MWA	LPA

CHASSIS DATA
MAKE: PIERCE
MODEL: ENFORCER

Pierce MANUFACTURING INC.

TITLE: 1500-D-1000 GAL POLY,152" FH D.S., LOW PS, FDLER SIDE CONTROL, (2) XLAYS, LADDERS ON SIDE, DELUGE
FOR: EVANSVILLE FIRE DEPARTMENT EVANSVILLE, INDIANA
DWG NO.: 33609AD

JOB NO.	33609
SCALE	1:24
DATE	
DRAWN BY	MWA
	04MAR19
CHECKED BY	KOU
	04MAR19
SHEET SIZE	D
SHEET NO.	1 OF 1

View File Created 30-MAY-2019 10:23:57