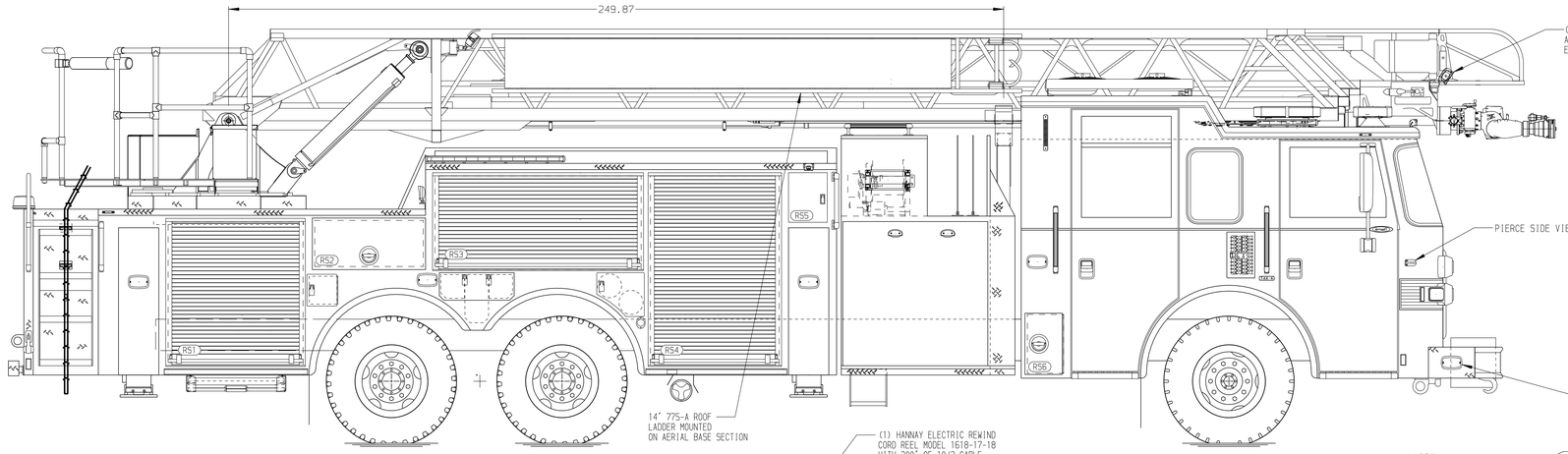

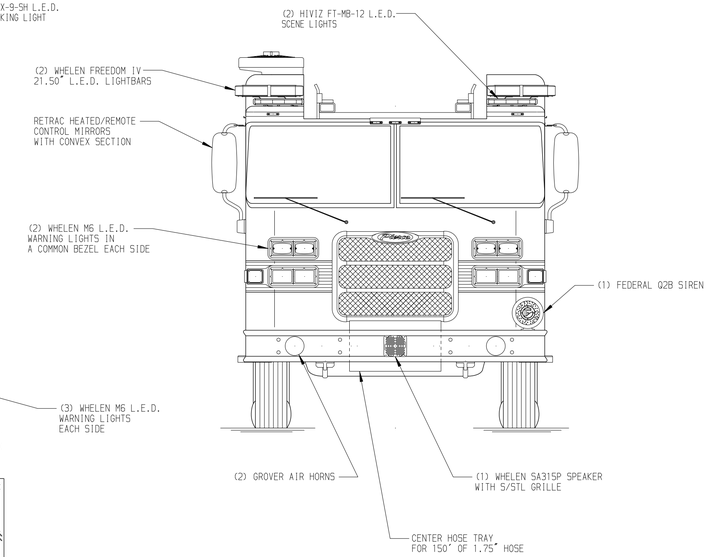

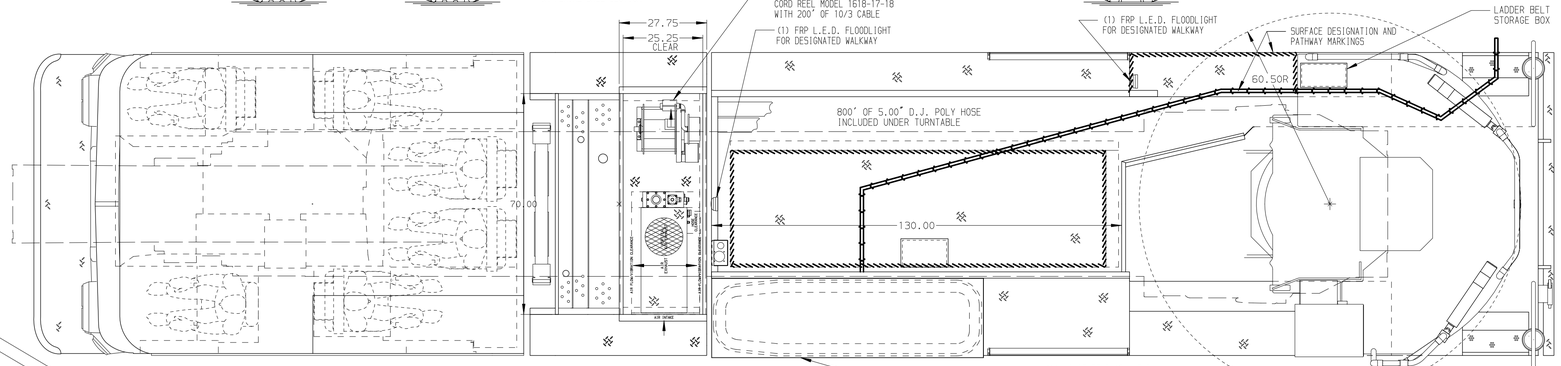

BODY	WATER TANK
107' ASL Tandem Axle Aluminum Body	450 Gallon Notched Poly Water Tank
COMPT,LEFT SIDE FRONT	Foam System
FH/FD Rollup Forward w/o Chute	Foam System Not Required
COMPT,LEFT SIDE REAR	Foam Cell
FH/FD Rollup and Lift-up Rearward	Foam Cell Not Required
COMPT,RIGHT SIDE FRONT	
Full Height Rollup Forward	
COMPT,RIGHT SIDE REAR	
Full Height Rollup and Liftup Rearward	

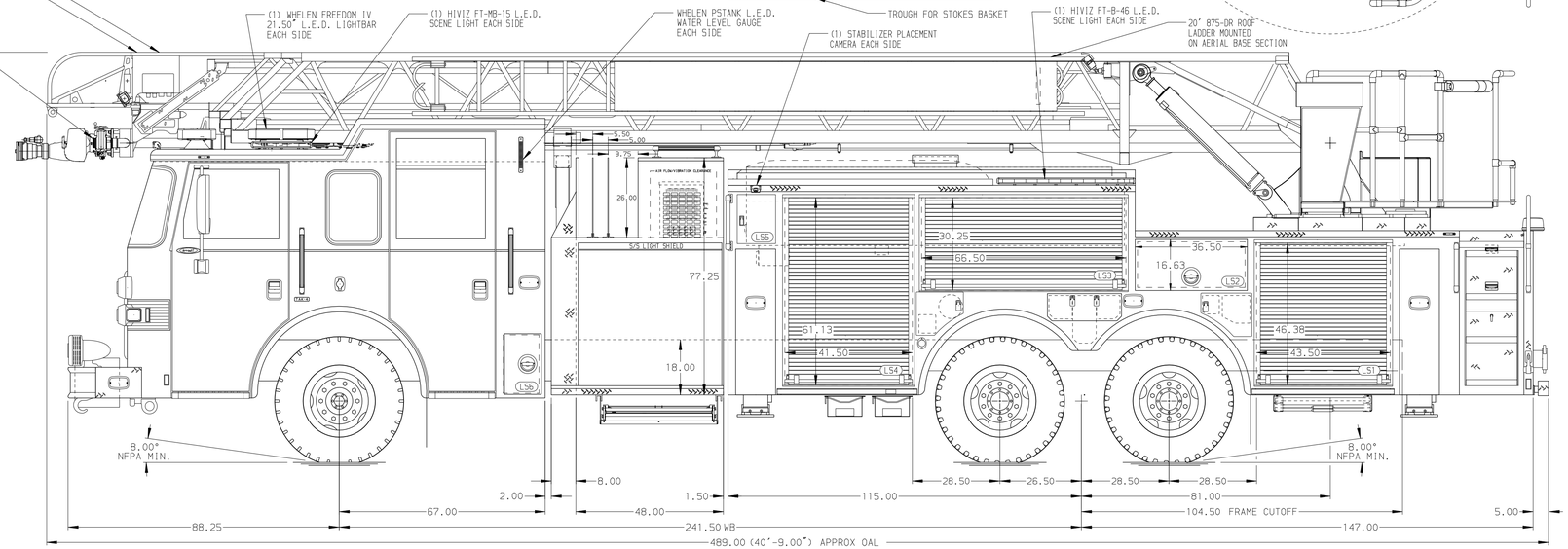

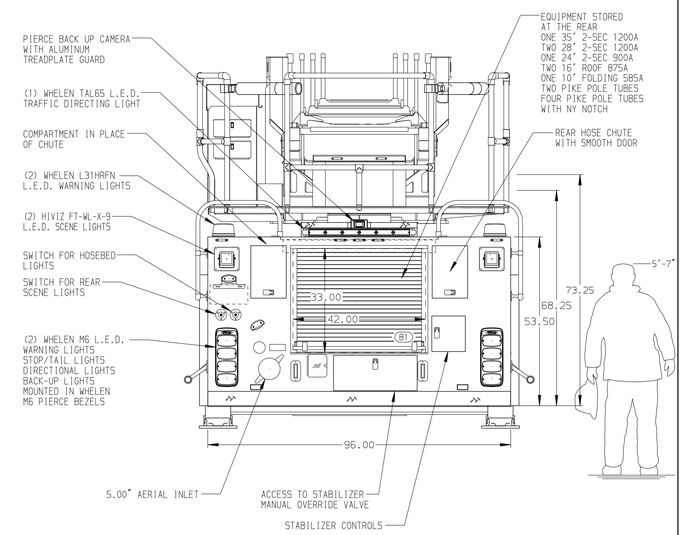

CHASSIS	CAB	AXLE,FRONT,CUSTOM	TRANSMISSION	PUMPHOUSE	CROSSLAYS,1.50"	SPEEDLAYS
Arrow XT Chassis	6710 Deep Notch Arrow XT Cab	22,800 lb TAK-4 Axle	ALlison 5th Gen, 4500 EVS P	48" Control Zone Side Mount	(2) 1.50" Standard Capacity	Speedlays Not Required
ENGINE	BUMPER	AXLE,REAR		PUMP	CROSSLAYS,2.50"	GENERATOR
525 HP DD13 Engine	19" Extended Stainless Steel	48,000 lb Meritor Axle		2000 GPM Waterous CSU	(1) 2.50" Standard Capacity	Harrison 6kW MCR Hydraulic

NOTE

DIMENSIONS SHOWN ARE APPROXIMATE AND ARE SUBJECT TO MINOR DEVIATIONS AS MAY OCCUR OR BE NECESSARY IN CONSTRUCTION.
MINOR DETAILS NOT SHOWN.

1. ONE 1.50 OUTLET WITH 2.00 PIPING AND SWIVEL LOCATED IN CENTER BUMPER TRAY
2. SHORELINE RECEPTACLE WITH KUSSMAUL SUPER AUTO-EJECT LOCATED ON DRIVER SIDE OF THE CAB
3. AIR INLET WITH DISCONNECT COUPLING LOCATED ON THE LEFT SIDE PUMP PANEL
4. BATTERY CHARGER/COMPRESSOR BEHIND PASSENGER'S SEAT WITH COVER
5. BATTERY CHARGE INDICATOR LOCATED NEAR DRIVER SEAT RISER WITH BRACKET
6. FIVE ADJUSTABLE SHELVES IN COMPARTMENTS PER SHOP ORDER
7. ONE FLOOR MOUNTED SLIDE-OUT TRAY IN COMPARTMENT PER SHOP ORDER
8. ONE ADJUSTABLE TILTING SLIDE-OUT TRAY IN COMPARTMENT PER SHOP ORDER
9. ONE SWING-OUT TOOL BOARD WITH PEGBOARD PATTERN IN COMPARTMENT PER SHOP ORDER
10. FOUR 120V RECEPTACLES IN CAB PER SHOP ORDER
11. TWO 120V RECEPTACLES IN COMPARTMENTS PER SHOP ORDER
12. CIRCUIT BREAKER PANEL IN COMPARTMENT PER SHOP ORDER
13. GTT 794 L.E.D. OPTICOM TRAFFIC LIGHT CONTROLLER MOUNTED AT AERIAL TIP PER SHOP ORDER
14. 1.00" LOWERED AERIAL PEDESTAL
15. 1500 GPM HIGH FLOW WATERWAY
16. 7.00" AERIAL LIMITED RETRACTION
17. ONE FENIEX HAMMER SPEAKER MOUNTED BEHIND FRONT BUMPER PER SHOP ORDER

MAXIMUM O.A.H. = 138.00" (11'-6.00")

REV	DATE	BY	CH
1	17APR19	TKA	KBO
2	22MAR19	TKA	SHE

CHASSIS DATA
MAKE: PIERCE
MODEL: ARROW-XT

Pierce MANUFACTURING INC.

TITLE: 107' ASCENDANT AERIAL LADDER AND BODY ASSEMBLY
-
FOR: FAIRLESS HILLS FIRE DEPARTMENT
-
DWG NO.: 33637AD

JOB NO. 33637
SCALE 1:24
DATE
DRAWN BY TKA 05MAR19
CHECKED BY KBO 19FEB19
SHEET SIZE D
SHEET NO. 1 OF 1

View File Created 02-MAY-2019 05:27:24