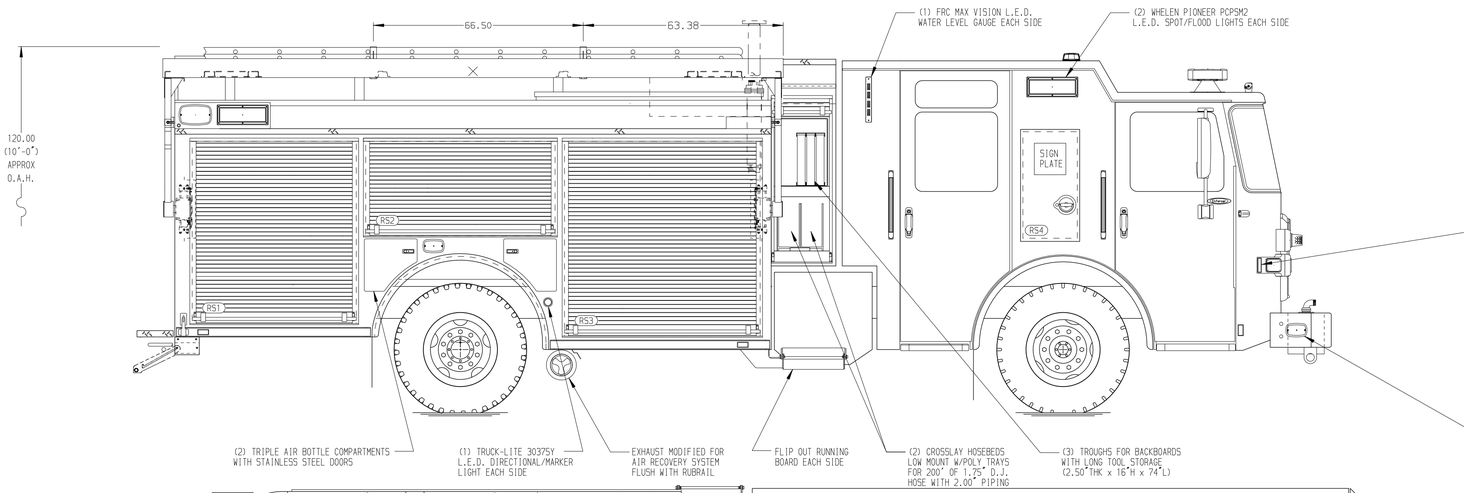

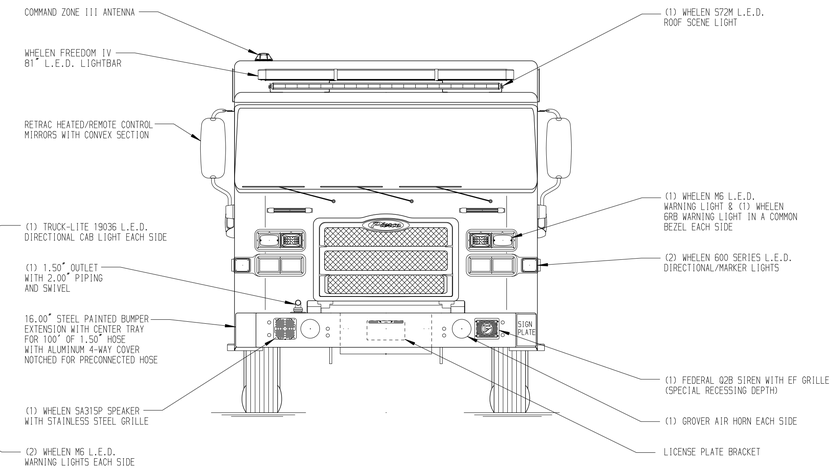

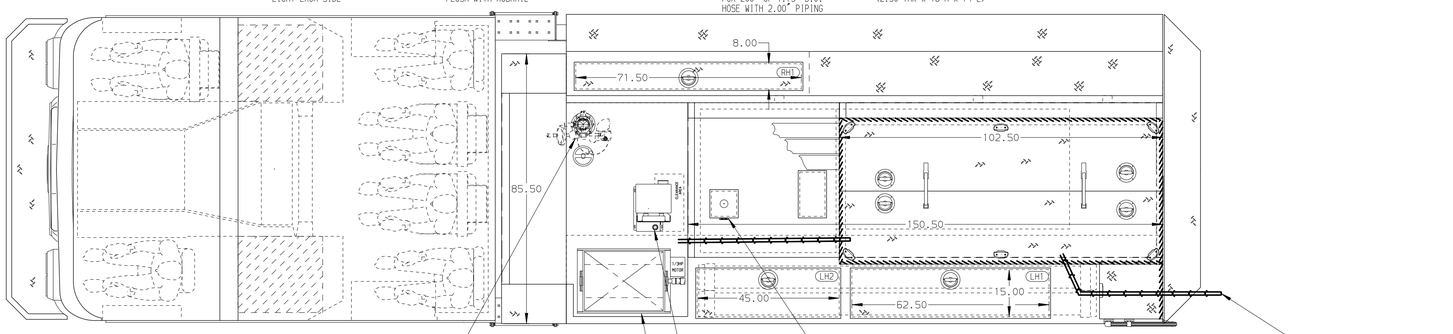

HOSEBED CAPACITIES

1 - 1000' OF 2.50" D.J. HOSE
2 - 800' OF 5.00" D.J. HOSE
3 - 200' OF 2.50" D.J. HOSE

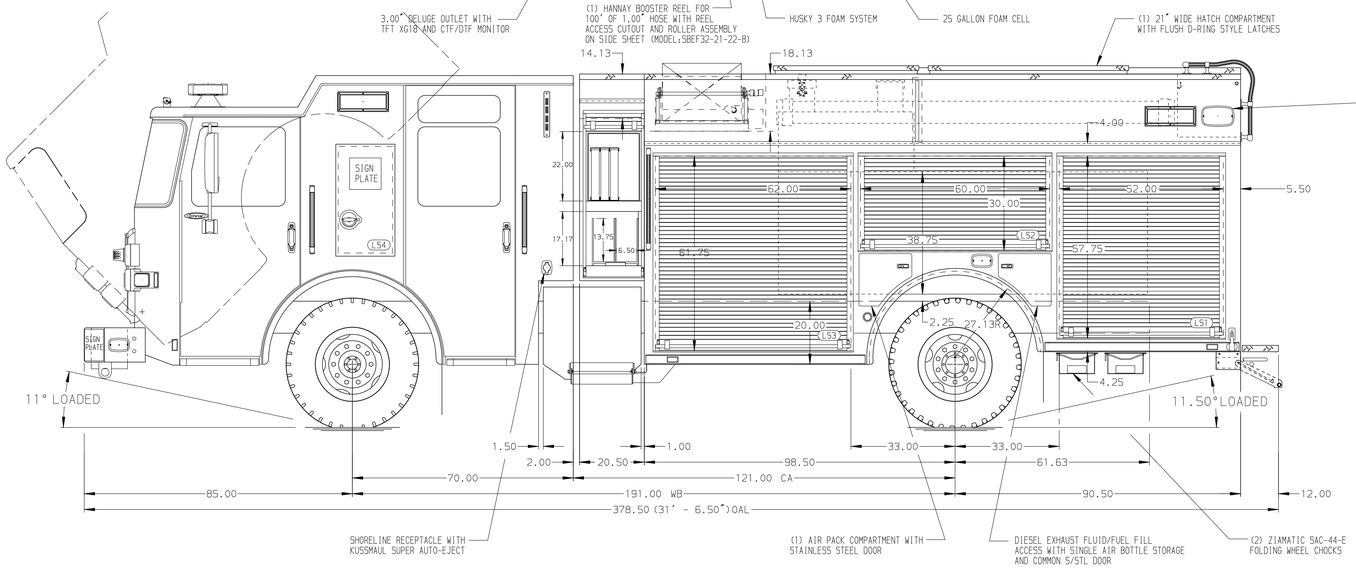

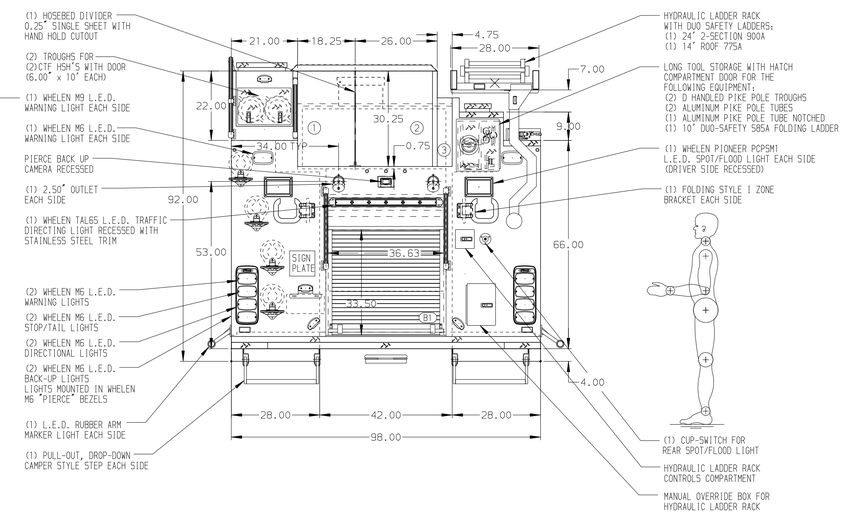

ALUMINUM BODY

SIDE ROLL AND FRONTAL IMPACT PROTECTION

NOTE

DIMENSIONS SHOWN ARE APPROXIMATE AND ARE SUBJECT TO MINOR DEVIATIONS AS MAY OCCUR OR BE NECESSARY IN CONSTRUCTION.
MINOR DETAILS NOT SHOWN.

1. AIR INLET/OUTLET WITH DISCONNECT FITTING RECESSED ON DRIVER'S SIDE PUMP PANEL
2. ONE ADJUSTABLE SPECIAL SIZE AND MOUNTED SHELF IN COMPARTMENT LS2
3. ONE ADJUSTABLE SLIDE-OUT TRAY IN COMPARTMENT LS1, RS1 & RS3
4. TWO ADJUSTABLE SLIDE-OUT SPECIAL SIZE TRAYS IN COMPARTMENT LS3
5. ONE ADJUSTABLE TILTING SLIDE-OUT TRAY IN COMPARTMENT LS1, LS3, RS2 & RS3, TWO IN RS1
6. CABLE RELEASE LATCH WITH SINGLE HAND OPERATION FOR TRAY IN COMPARTMENT LS1 & B1, TWO IN RS1 & RS2
7. ONE FLOOR MOUNTED SLIDE-OUT TRAY WITH 2.00" SIDES IN COMPARTMENT LS1, TWO IN RS1 & RS3
8. ONE ADJUSTABLE TOOL BOARD MOUNTED TO SLIDE-OUT TRAY IN COMPARTMENT RS3
9. ONE SWING-OUT ALUMINUM TOOL BOARD IN COMPARTMENT LS2
10. TRANSVERSE PARTITION IN COMPARTMENT LS1/B1 & RS1/B1
11. ONE VERTICAL PARTITION IN COMPARTMENT RS1 & RS3
12. ALUMINUM PEGBOARD WITH TRACKS ON THE SIDE WALLS OF COMPARTMENT RS3
13. BATTERY CHARGER/INVERTER LOCATED IN CAB OVERHEAD COMPARTMENT
14. CIRCUIT BREAKER PANEL WITH INVERTER IN LEFT SIDE CAB COMPARTMENT

REV	DATE	BY	CH
7	17JUL19	AMI	CHR
6	15JUL19	AMI	CHR
5	11JUN19	AMI	DTS
4	07JUN19	AMI	DTS
3	14MAR19	AMI	NPE

CHASSIS DATA
MAKE: PIERCE
MODEL: ENFORCER

Pierce MANUFACTURING INC.

TITLE: 1500-D-750P W/25G FOAM CELL, 189" RESCUE PUC BODY (2)XLAYS, DELUGE, HUSKY 3, BOOSTER REEL,HYD LDR RACK
FOR: YOCHA DEHE FIRE DEPARTMENT BROOKS, CALIFORNIA
DWG NO.: 33644AD

JOB NO.	33644
SCALE	1:24
DATE	
DRAWN BY	AMI 06MAR19
CHECKED BY	NPE 06MAR19
SHEET SIZE	D
SHEET NO.	1 OF 1

View File Created 18-JUL-2019 07:58:03