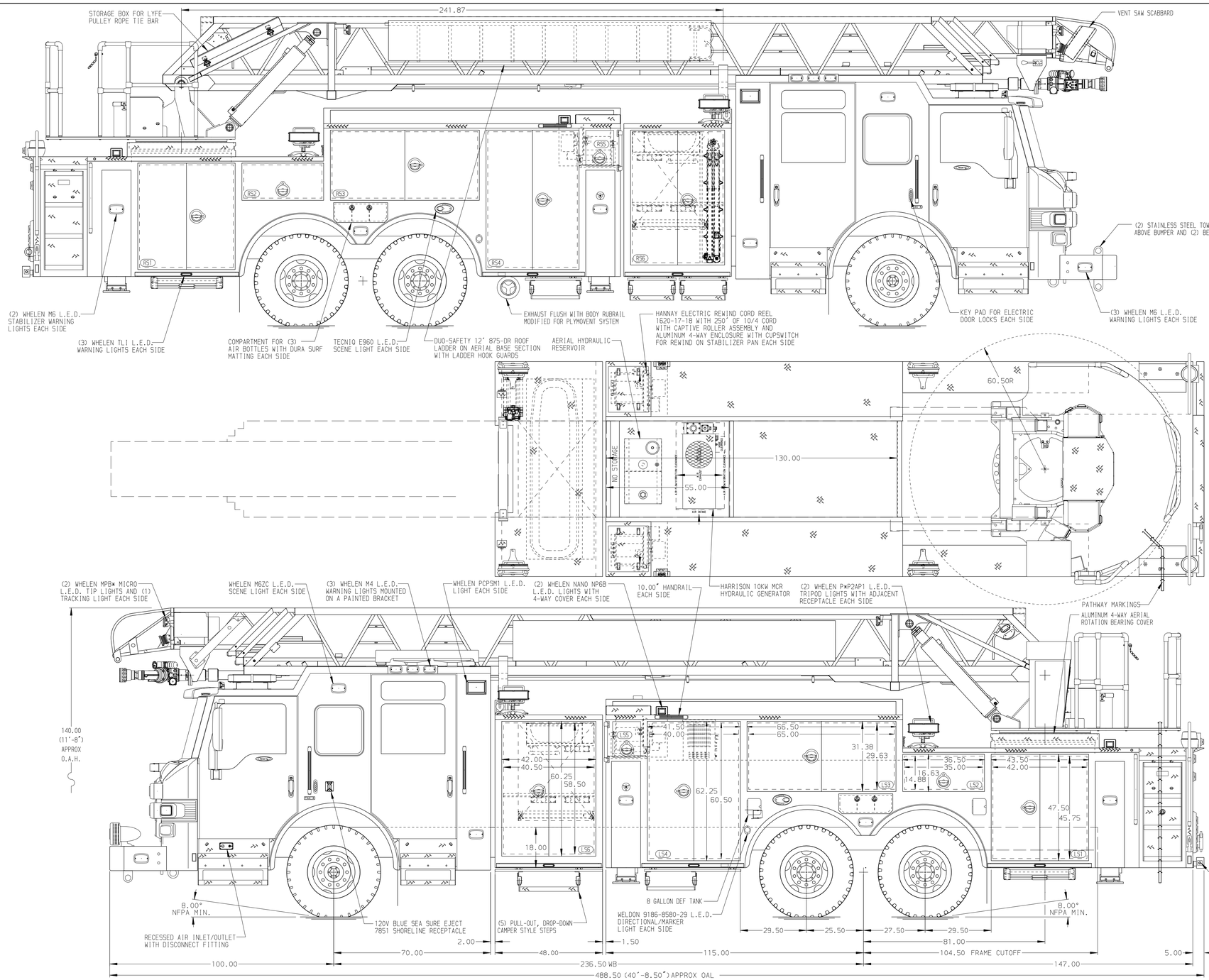

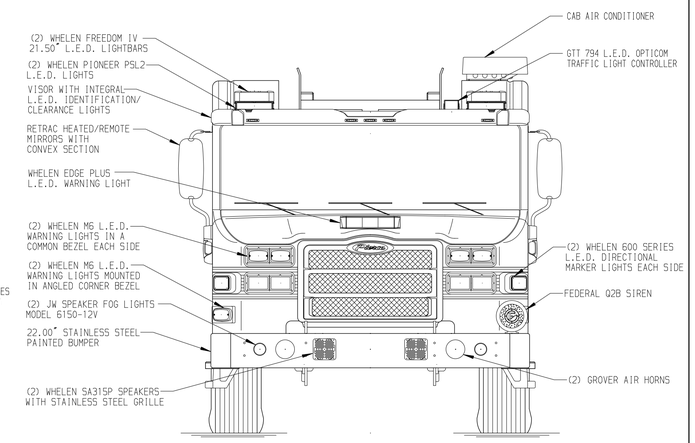

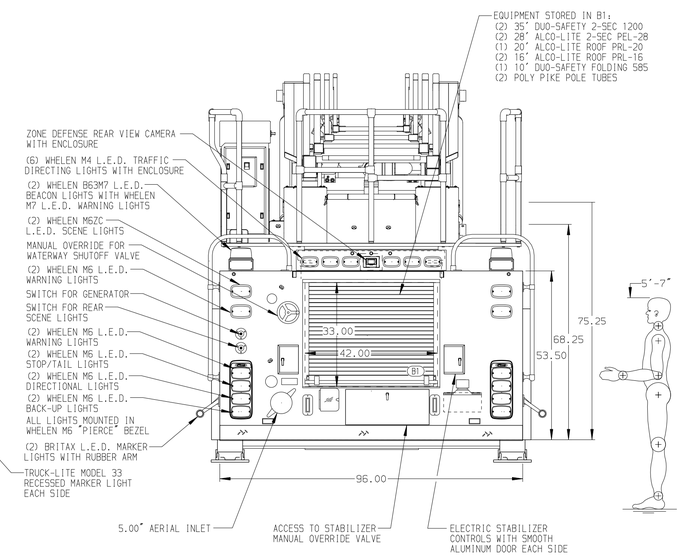

ALUMINUM BODY

MAX. O.A.H. 140.00"

SIDE ROLL AND FRONTAL IMPACT PROTECTION

NOTE

DIMENSIONS SHOWN ARE APPROXIMATE AND ARE SUBJECT TO MINOR DEVIATIONS AS MAY OCCUR OR BE NECESSARY IN CONSTRUCTION.
MINOR DETAILS NOT SHOWN.

1. RUD ROTOGRIP AUTOMATIC TIRE CHAINS TO BE PROVIDED AT REAR
2. BATTERY CHARGER/AIR COMPRESSOR IN COMPARTMENT LS6
3. BATTERY CHARGE INDICATOR LOCATED NEAR DRIVER'S SEAT RISER
4. S/STL SCUFFPLATE AROUND AIR BOTTLE COMPARTMENTS, DEF AND FUEL FILL OPENINGS
5. LITTLE GIANT DEFENDER MODEL 17 LADDER IN COMPARTMENT RS6
6. CIRCUIT BREAKER PANEL IN COMPARTMENT LS6
7. TWO GLAD HANDS LOCATED BELOW FRONT BUMPER
8. NINE POLY PIKE POLE TUBES IN COMPARTMENT LS6/RS6
9. ACCESS PANEL FOR CORD REELS IN COMPARTMENTS LS4,RS4
10. ONE ADJUSTABLE FULL WIDTH/FULL DEPTH SHELF IN COMPARTMENTS LS3,RS4;TWO IN LS1,RS1,LS4
11. TWO ADJUSTABLE SHELVES WITH SPECIAL SIDE HEIGHT IN COMPARTMENT RS4
12. ONE ADJUSTABLE FULL WIDTH SHELF IN TRANSVERSE COMPARTMENT LS6/RS6
13. ONE 1-WAY SLIDE-OUT TRAY (3/4 DEPTH OF TRANSVERSE) WITH CABLE RELEASE IN COMPARTMENT LS6
14. ONE FLOOR MOUNTED SLIDE-OUT TRAY WITH 2" SIDES IN COMPARTMENTS LS1,LS4,RS1,RS4
15. ONE ADJUSTABLE TILT/SLIDE-OUT TRAY WITH CABLE RELEASE IN COMPARTMENT RS3
16. ONE VERTICAL PARTITION IN COMPARTMENT RS6
17. STORAGE RACK FOR STOKES BASKET AND TOOLS WITH ACCESS AND HANDRAIL AT EACH SIDE IN COMPARTMENT LS6/RS6
18. ALL EXTERNAL 12V ELECTICAL LIGHT COMPONENTS TO BE DEUTSCH CONNECTIONS
19. TWO 120V 15/20A DUPLEX RECEPTICAL LOCATED IN LS4,R4;THREE IN CAB
20. COMPRESSION TYPE FITTING IN PLACE OF PUSH LOCK FITTINGS ON PNEUMATIC NYLON TUBES
21. RUBBER GROMMETS IN PLACE OF PLASTIC WHEN POSSIBLE
22. LYFEPULLEY RESCUE SYSTEM AT AERIAL TIP
23. LIFTING EYE RESCUE ATTACHMENT AT AERIAL TIP
24. L.E.D. LIGHTING ON AERIAL LADDER SECTIONS
25. 2-WAY INTERCOM SYSTEM BETWEEN AERIAL TIP AND TURNTABLE
26. TRIDENT FOLDING STEPS ON AERIAL DEVICE
27. STABILIZERS MODIFIED FOR 18" GROUND PENETRATION
28. AERIAL PEDESTAL RAISED 3.00"
29. 6.00" LIMITED RETRACTION ON AERIAL FLY SECTION1
30. PULL STRAP ON DOOR IN COMPARTMENTS LS5,RS5

REV	DATE	BY	CH
7	10JUN19	SHU	SHA
8	15MAY19	SHU	SHA
7	26FEB19	SHU	JBL

CHASSIS DATA
MAKE: PIERCE
MODEL: VELOCITY

Pierce MANUFACTURING INC.

TITLE: 105' AERIAL LADDER AND BODY ASSEMBLY NO PUMP / NO TANK
FOR: FAIRFAX COUNTY FIRE & RESCUE DEPARTMENT FAIRFAX, VA
DWG NO.: 33672AD

JOB NO.	33672
SCALE	1:24
DATE	
DRAWN BY	SHU 14FEB19
CHECKED BY	JBL 18FEB19
SHEET SIZE	D
SHEET NO.	1 OF 1

View File Created 10-JUN-2019 13:01:21