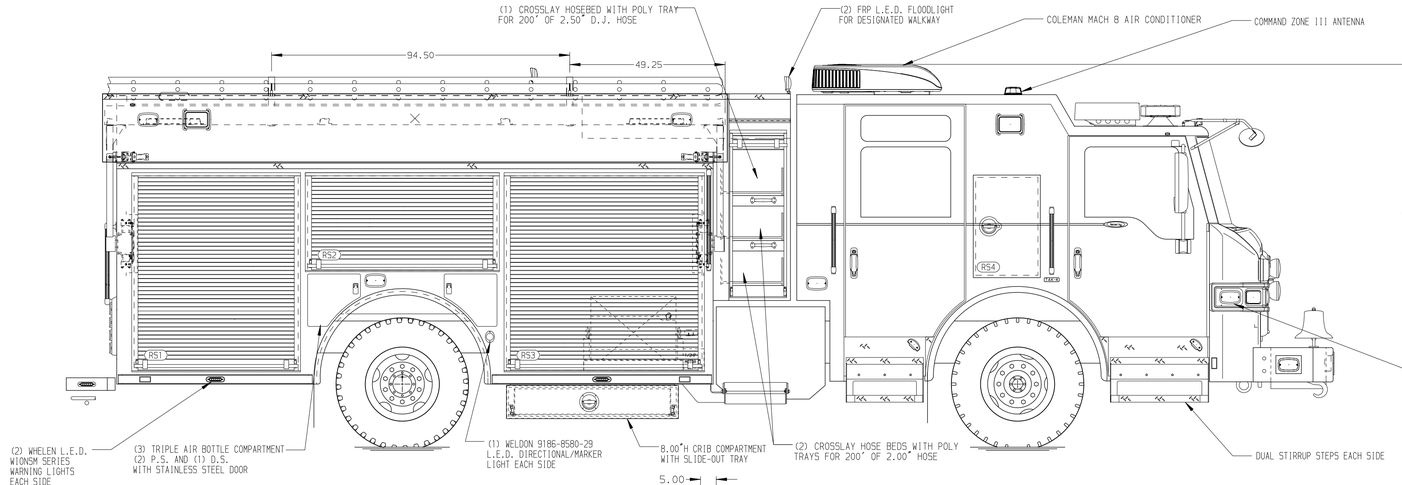

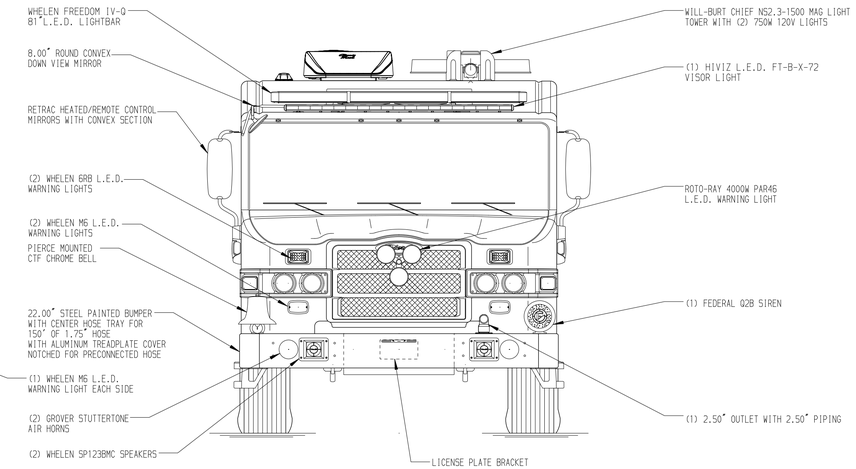

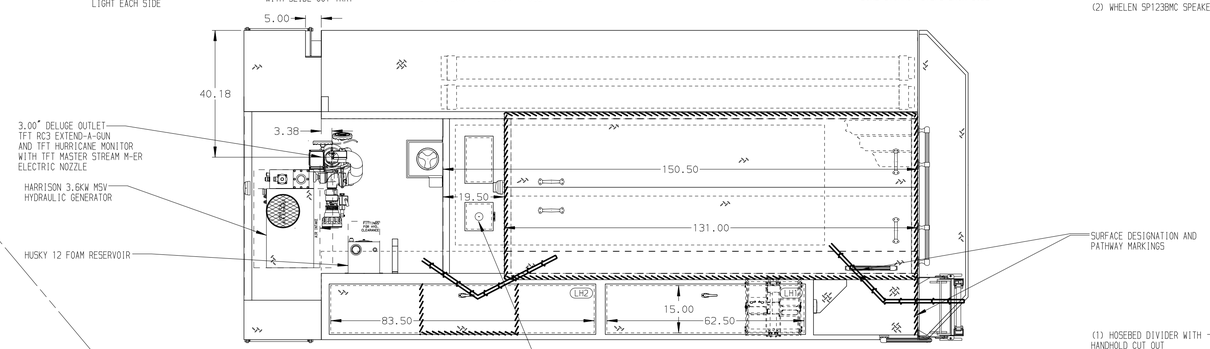

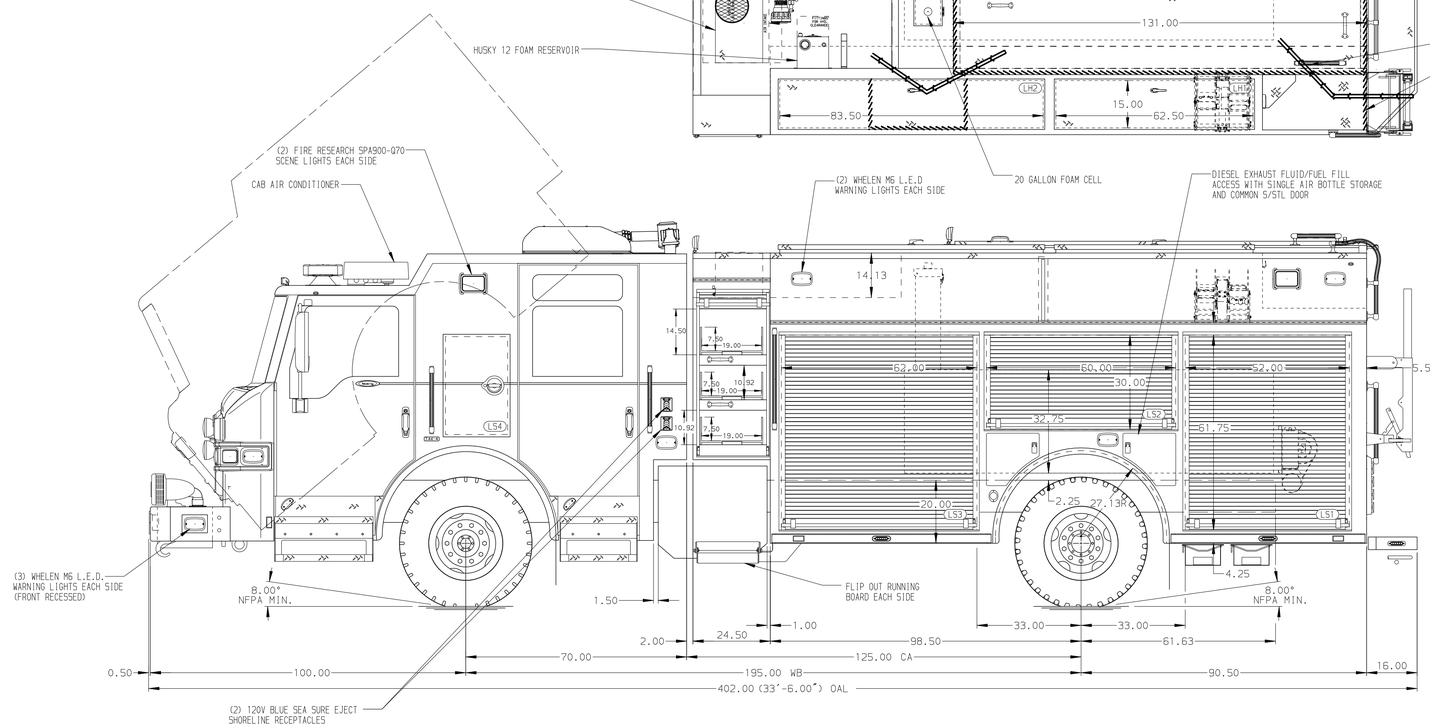

HOSEBED CAPACITIES

1. 250" OF 3.00" D.J. POLY HOSE
2. 1000" OF 5.00" D.J. POLY HOSE
3. 400" OF 3.00" D.J. POLY HOSE

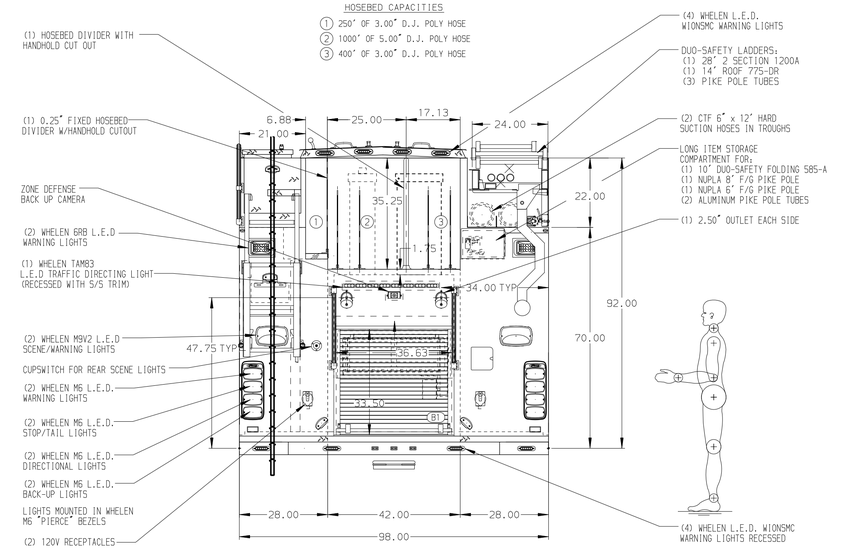

ALUMINUM BODY

SIDE ROLL AND FRONTAL IMPACT PROTECTION

NOTE

DIMENSIONS SHOWN ARE APPROXIMATE AND ARE SUBJECT TO MINOR DEVIATIONS AS MAY OCCUR OR BE NECESSARY IN CONSTRUCTION.
MINOR DETAILS NOT SHOWN.

1. AIR INLET/OUTLET WITH DISCONNECT FITTING ON D.S. PUMP PANEL
2. BATTERY CHARGER LOCATED IN COMPARTMENT LS3
3. ONE ADJUSTABLE FULL WIDTH/DEPTH SPECIAL SIDE HEIGHT SHELF IN COMPARTMENT RS2 & RS3
4. ONE ADJUSTABLE FULL WIDTH/FULL DEPTH SHELF IN COMPARTMENT RS1 & LS3, TWO IN RS3
5. ONE ADJUSTABLE SLIDE-OUT TRAY LOCATED IN COMPARTMENT RS1
6. ONE ADJUSTABLE TILTING SLIDE-OUT TRAY IN COMPARTMENT LS1
7. ONE FLOOR MOUNTED SLIDE-OUT TRAY IN COMPARTMENT LS1, RS1 & B1
8. ONE SWING-OUT ALUMINUM TOOL BOARD WITH PAC TRAC IN COMPARTMENT LS2
9. ONE VERTICAL PARTITION IN LH1 HATCH COMPARTMENT
10. ONE NYLON STRAP WITH VELCRO IN COMPARTMENT RS3
11. STORAGE BIN FOR (4) EXTINGUISHERS IN COMPARTMENT RS3
12. ONE HANNAY BOOSTER REEL MODEL SBEF 34-23-24 LOCATED IN COMPARTMENT RS3 WITH CAPACITY FOR 150' OF 1.00" HOSE
13. CIRCUIT BREAKER PANEL IN COMPARTMENT LS3
14. ONE AKRON ERWC-10-28 ELECTRIC REWIND CORD REEL LOCATED IN COMPARTMENT B1 WITH 200' OF 10/3 CABLE
15. ONE CMW 6011 DUAL HYDRAULIC REEL WITH 100' OF HOSE LOCATED IN HATCH ABOVE COMPARTMENT LS1
16. EXTINGUISHER RACK IN COMPARTMENT RS3

REV	DATE	BY	CH
7	17JUN19	AMI	CHR
6	12JUN19	KLE	KWI
5	28MAY19	AMI	CHR
4	02MAY19	AMI	CHR
3	19MAR19	AMI	CDU

CHASSIS DATA
MAKE: PIERCE
MODEL: VELOCITY

Pierce MANUFACTURING INC.

TITLE: 1500-D-520P 500 GAL OF WATER W/ 20 GAL FOAM CELL 189" PUC RESCUE, (3)CROSSLAYS, HYDRAULIC LADDER RACK
FOR: THE WOODLANDS TOWNSHIP THE WOODLANDS, TEXAS
DWG NO.: 33677AD

JOB NO.	33677
SCALE	1:24
DATE	
DRAWN BY	AMI 25FEB19
CHECKED BY	CDU 07MAR19
SHEET SIZE	D
SHEET NO.	1 OF 1

View File Created 17-JUN-2019 15:12:44