PASSENGER'S SIDE COMPARTMENTS CONTAIN THE FOLLOWING:

COMPARTMENT P1 CONTAINS:
- (1) FLOOR MTD SLIDE OUT TRAY W/TOOLBOARD
- (4) STD DEPTH ADJ SHELVES
- (2) HYD REELS WITH 100' OF CORE-TECH HOSE
- (1) MOUNTING PROVISION FOR FUTURE HYD REEL
- (2) VERTICAL 'L'-SHAPED DIVIDERS
- (1) 30A,240V 3-PRONG RECEPTACLE
- (1) FLOOR MOUNTED TRAY
- (1) SLIDE-OUT ROLLER GUIDE BRACKET
- (1) SWITCH FOR 30A RECEPTACLE

COMPARTMENT P2 CONTAINS:
- (1) ELECTRIC CORD REEL WITH 200' OF 10/4 YELLOW CORD
- (1) SLIDE-OUT ROLLER GUIDE BRACKET
-

COMPARTMENT P3 CONTAINS:
- (2) REINFORCED PEGBOARD VERTICAL COMPARTMENT DIVIDERS
- (2) STD DEPTH ADJ SHELVES
- (2) STD DEPTH SLIDE OUT TOOLBOARDS
- (1) FLOOR MOUNTED TRAY
-

COMPARTMENT P4 CONTAINS:
- (1) FLOOR MOUNTED TRAY
- (1) 1/2 DEPTH ADJ SLIDE OUT/TILT TRAY
- (1) 3/4 DEPTH ADJ SLIDE OUT TRAY
- (1) LOW PRESSURE AIR REEL WITH 200' OF HOSE
- REGULATOR AND GUAGES FOR AIR REEL
- (1) SLIDE-OUT ROLLER GUIDE BRACKET
-

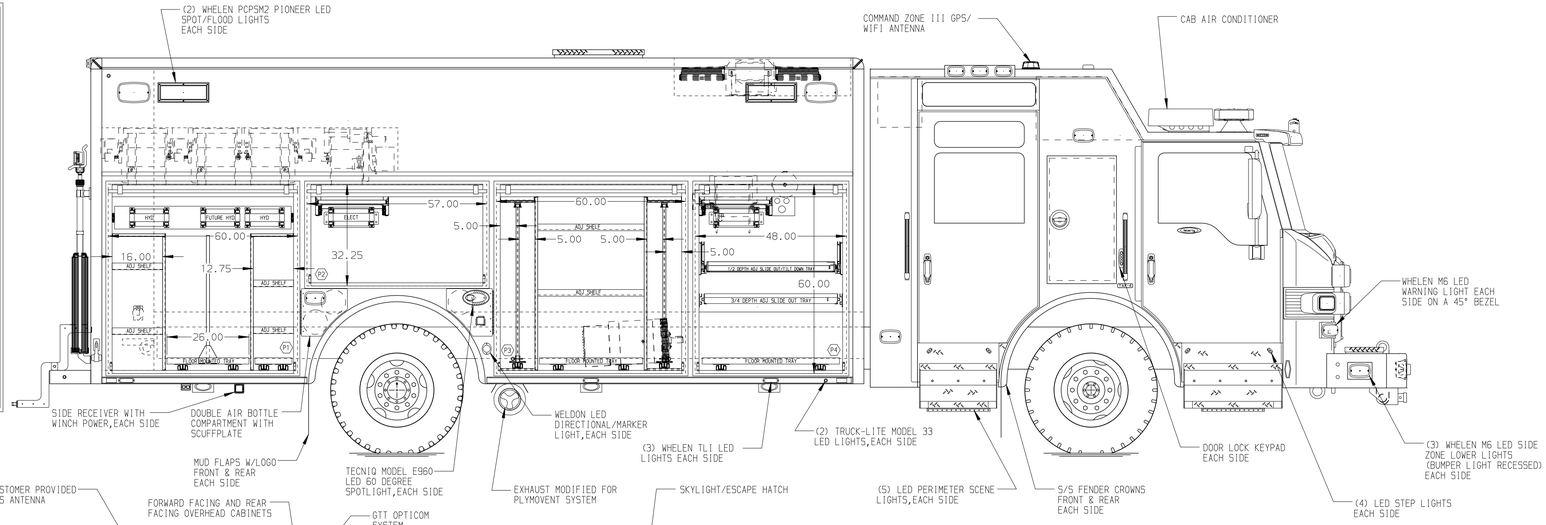

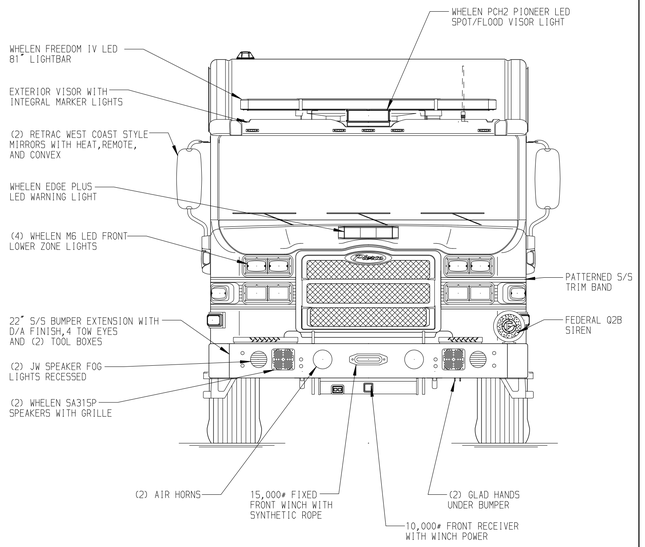

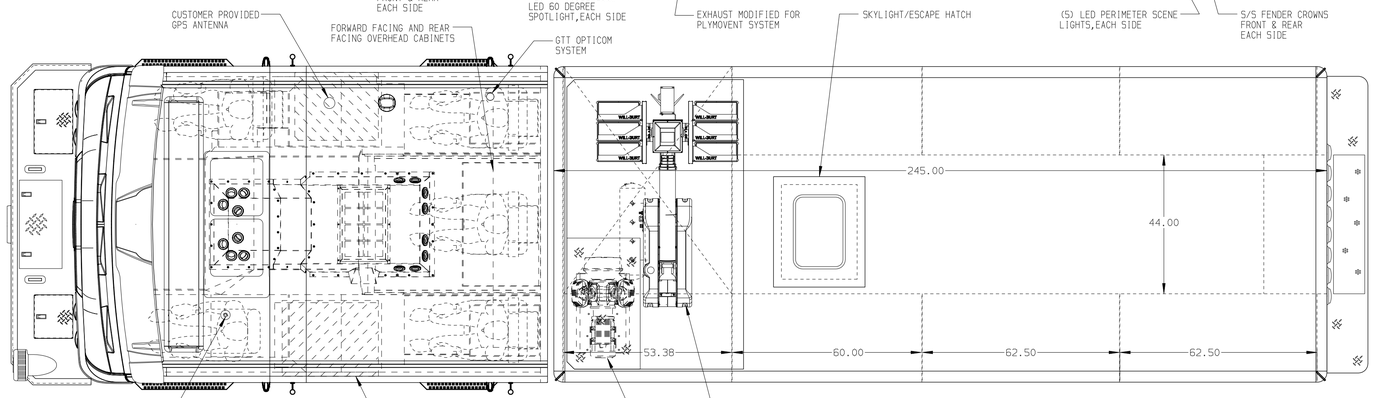

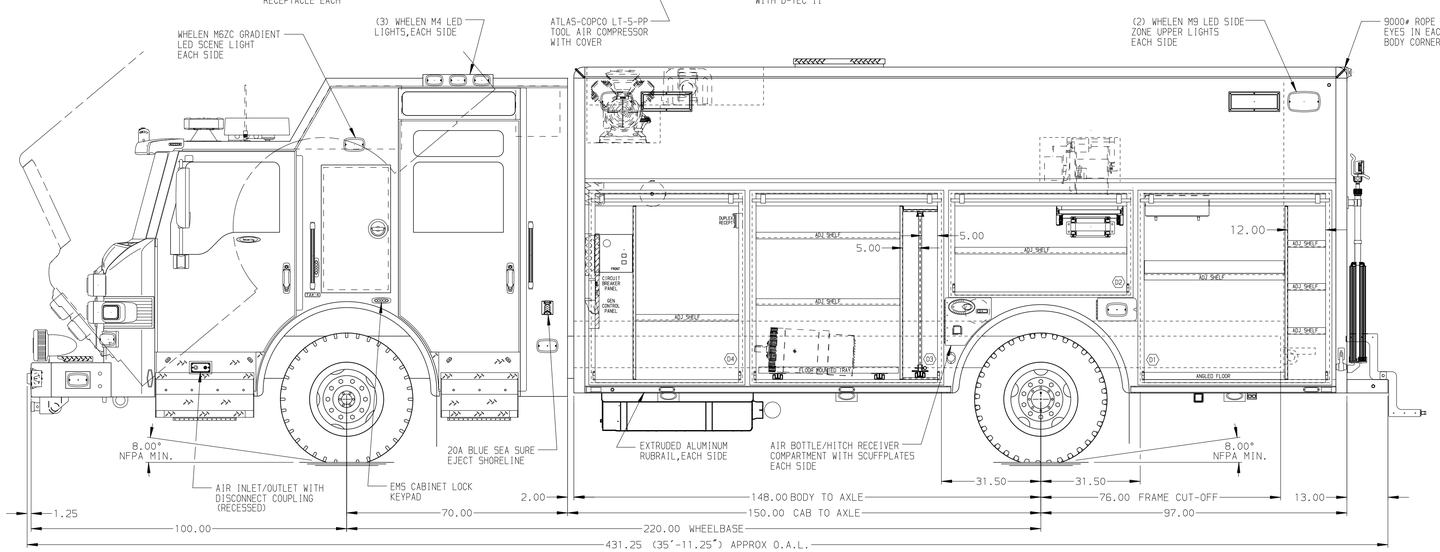

DRIVER'S SIDE COMPARTMENTS CONTAIN THE FOLLOWING:

COMPARTMENT D1 CONTAINS:
- (1) VERTICAL COMPARTMENT DIVIDER
- ANGLED COMPARTMENT FLOOR
- (1) STD DEPTH ADJ SHELF(FLANGE DOWN)
- (1) POWER DISTRIBUTION BOX
- (3) STD DEPTH ADJ SHELVES

COMPARTMENT D2 CONTAINS:
- (1) STD DEPTH ADJ SHELF
- (1) ELECTRIC CORD REEL WITH 200' OF 10/4 YELLOW CORD
- (1) SLIDE-OUT ROLLER GUIDE BRACKET

COMPARTMENT D3 CONTAINS:
- (2) STD DEPTH ADJ SHELVES
- (1) REINFORCED PEGBOARD VERTICAL COMPARTMENT DIVIDER
- (1) FLOOR MOUNTED TRAY
- (1) STD DEPTH SLIDE OUT TOOLBOARD
-

COMPARTMENT D4 CONTAINS:
- (1) STD DEPTH ADJ SHELF
- (1) REAR WALL DIVIDER
- (1) REINFORCED PEGBOARD VERTICAL COMPARTMENT DIVIDER
- (1) CIRCUIT BREAKER PANEL
- (1) NIGHT SCAN CONTROLLER
- (1) GENERATOR METER PANEL
- (1) BLUE SEA CHARGER
- (1) AIR COMPRESSOR CONTROL PANEL
- (1) 15A,120V DUPLEX RECEPTACLE
-
-

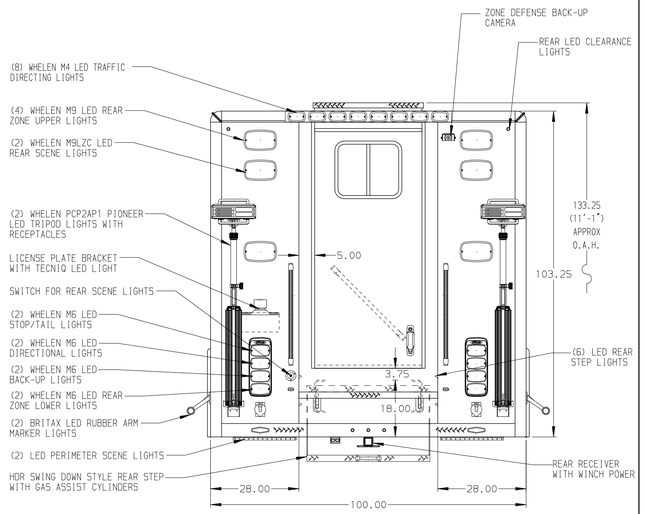

NOTE

DIMENSIONS SHOWN ARE APPROXIMATE AND ARE SUBJECT TO MINOR DEVIATIONS AS MAY OCCUR OR BE NECESSARY IN CONSTRUCTION.
MINOR DETAILS NOT SHOWN.

NOTES:
1. RUD AUTOMATIC TIRE CHAINS
2. WARN ZEON 10,000# PORTABLE WINCH WITH SYNTHETIC ROPE
3. FLOOR IN CAB AND CREW CAB TO BE PADDED RUBBER
4. DAVID CLARK S-POSITION INTERCOM SYSTEM
5. BATTERY CHARGE INDICATOR LOCATED ON DRIVER'S SEAT
6. (2) 9,000# RECEIVER STYLE TIE DOWNS
7. (2) 4-BOTTLE SCBA RACKS SHIPPED LOOSE
8. PULL STRAPS ON ALL ROLL UP DOOR COMPARTMENTS
9. S/S 'L'-SHAPED GUARDS ON ALL ROLL UP DOORS
10. AMDOR LED COMPARTMENT LIGHTS IN EACH COMPARTMENT
11. ONAN 30kW SINGLE PHASE PTO DRIVEN GENERATOR LOCATED BETWEEN THE FRAME RAILS
12. BRUSHED S/S SCUFFPLATES ON CAB DOOR JAMBS
13. VOGEL LUBE SYSTEM
14. SEALED RAIN DRIP ON CAB AND CREW CAB
15. 15/20A,120V DUPLEX RECEPTACLE LOCATED TO THE REAR OF THE DRIVER'S SEAT

CLEAR DOOR WIDTH KEY

AMDOR ROLL UP DOORS:	-2 1/4"
GORTITE ROLL UP DOORS:	-2 1/2"
PIERCE DOUBLE LAP DOORS:	-4 1/4"
PIERCE LIFT-UP LAP DOORS:	-1 1/2"

(EX: 60"F-F - 2 1/4"= 57 3/4" CLEAR)
(F-F)= FRAME TO FRAME

REV	DATE	BY	CH
4	27AUG19	AZU	CDK
3	26JUL19	AZU	CDK
2	15MAY19	DHE	CDK

CHASSIS DATA
MAKE: PIERCE
MODEL: VXFR7020

SIDE ROLL & FRONTAL IMPACT PROTECTION

Pierce MANUFACTURING INC.

TITLE: HEAVY DUTY RESCUE WALKIN
FOR: FAIRFAX COUNTY FIRE AND RESCUE DEPT. FAIRFAX, VA
DWG NO.: 33681AD-SH1

JOB NO.	33681
SCALE	1:24
DATE	
DRAWN BY	DHE
	23APR19
CHECKED BY	CDK
	03MAY19
SHEET SIZE	D
SHEET NO.	1 OF 1

View File Created 28-AUG-2019 08:39:20